Shop Tested Plywood Tips

Mitered Half Laps: Simple Steps to Perfect Results

Woodsmith®

www.Woodsmith.com

Vol. 24 / No. 143

Elegant Cherry Armoire

Solve Your Storage Problems Now

Build Your Own Walnut & Glass Display Case

Fine-Crafted Photo Frame

Start to Finish in 4 Hours

A Publication of August Home Publishing

Woodsmith

No. 143 October, 2002

Publisher Donald B. Peschke
Editor Terry J. Strohman
Senior Editor Jon Garbison
Contrib. Editors Bryan Nelson, Vince Ancona
Art Director Todd Lambirth
Senior Illustrators David Kreyling, Dirk Ver Steeg, Harlan V. Clark
Graphic Intern Nathan Robertson

CREATIVE RESOURCES
Creative Director: Ted Kralicek • *Sr. Project Designers:* Ken Munkel, Kent Welsh, Ryan Mimick, Chris Fitch • *Shop Craftsmen:* Steve Curtis, Steve Johnson • *Sr. Photographer:* Crayola England

SPECIAL PUBLICATIONS
Corp. VP: Douglas L. Hicks • *Art Director:* Douglas A. Flint • *Senior Graphic Designer:* Chris Glowacki • *Senior Editor:* Craig Ruegsegger • *Asst. Editor:* Joel A. Hess • *Graphic Designers:* Vu Nguyen, Jonathan Eike • *Edit. Intern:* Cindy Thurmond

CIRCULATION
Subscriber Services Director: Sandy Baum • *New Business Circ. Mgr.:* Wayde Klingbeil • *Multi-media Promotions Manager:* Rick Junkins • *Promotions Analyst:* Patrick Walsh • *Renewal Mgr.:* Paige Rogers • *Billing & Collections Manager:* Rebecca Cunningham • *Circ. Marketing Analysts:* Kris Schlemmer, Paula M. DeMatteis • *Sr. Graphic Designers:* Mark Hayes, Robin Friend

CORPORATE SERVICES
VP of Finance: Mary R. Scheve • *Controller:* Robin K. Hutchinson • *Sr. Account.:* Laura J. Thomas • *Accts. Payable:* Mary J. Schultz • *Accts. Receivable:* Margo Petrus • *Production Dir.:* George Chmielarz • *Electronic Publishing Director:* Douglas M. Lidster • *System Administrator:* Cris Schwanebeck • *PC Maint. Tech.:* Robert D. Cook • *Pre-press Image Specialists:* Troy A. Clark, Minniette Johnson • *New Media Mgr.:* Gordon C. Gaippe • *Web Site Art Dir.:* Gene Pedersen • *Web Server Admin.:* Carol Schoeppler • *Web Content Mgrs.:* David Briggs, Sue M. Moe • *Web Designer:* Kara Blessing • *Professional Development Dir.:* Michal Sigel • *H.R. Asst.:* Kirsten Koele • *Office Manager:* Natalie Lonsdale • *Facilities Manager:* Kurt Johnson • *Receptionist:* Jeanne Johnson • *Mail Room/Delivery:* Lou Webber

WOODSMITH MAIL ORDER
Operations Director: Bob Baker • *Cust. Service Mgr.:* Jennie Enos • *Warehouse Supr.:* Nancy Johnson • *Buyer:* Linda Jones • *Tech. Service Rep.:* Johnny Audette • *Admin. Assist.:* Nancy Downey • *Sr. Cust. Serv. Reps.:* Tammy Truckenbrod, Anna Cox, April Revell, Deborah Rich • *Cust. Serv. Reps.:* Valerie Jo Riley, Kim Harlan • *Warehouse:* Sylvia Carey

WOODSMITH STORE
Mgr.: Dave Larson • *Asst. Manager:* Tim Thelen • *Sales Staff:* Wendell Stone, Larry Morrison, Mark Johnson, Gregory Kauzlarich, Brian McCallum • *Office Mgr.:* Vicki Edwards

Woodsmith® (ISSN 0164-4114) is published bimonthly (Feb., Apr., June, Aug., Oct., Dec.) by August Home Publishing Company, 2200 Grand, Des Moines, IA 50312.
Woodsmith® is a registered trademark of August Home Publishing.

Copyright© 2002 August Home Publishing Company. All rights reserved.

Subscriptions: Single copy: $4.95. One year subscription (6 issues), $24.95. (Canada/International add $10 per year, U.S. funds.)
Periodicals Postage Paid at Des Moines, IA and at additional offices. USPS/Perry-Judd's Heartland Division Automatable Poly.
Postmaster: Send change of address to *Woodsmith*, Box 37112, Boone, IA 50037-2112.
Subscription Questions? Write to *Woodsmith*, P.O. Box 842, Des Moines, IA 50304-9961 or call 1-800-333-5075, 8:00 am to 5:00 pm, Central Time, weekdays. Or send an email to: orders@woodsmith.com
Email: woodsmith@woodsmith.com
World Wide Web: http://www.woodsmith.com

Printed in U.S.A.

AUGUST HOME PUBLISHING COMPANY

SAWDUST

As I sat down to write this section, my phone rang. The call was from a long-time subscriber. He wanted to know how we create the project design drawings that appear in *Woodsmith*.

Of course we've been using computers for years to help design projects for the magazine. But we were using them like electronic drawing boards — to draw lines much like you would with paper and pencil. All that changed about eighteen months ago, however, when we went from two-dimensional drawings to three-dimensional computer models.

Now we can actually "build" an entire project on the computer. Each individual part is made, and then the parts are joined together, just like building blocks. For example, to add cove molding around a cabinet, the designer starts with a workpiece. Then the curved profile is "cut" in the edge of the piece. Next, the piece is "mitered" to the correct length. And finally, it's "glued" to the cabinet. In many ways, it's similar to building a project down in the shop.

Of course this means there's never a problem once we start building, right? Well, not exactly.

Take the Bedroom Armoire in this issue for instance. The idea behind this project was to take a rather large project and to make it as easy to build as possible. So what we came up with is essentially a large plywood box with plywood dividers for the drawer openings. Then we designed the drawers to fit the openings.

As the actual construction got underway, each drawer was checked one-by-one to make sure it slid in and out smoothly and that the gap around the drawer front was consistent. Sure, there was a little sanding or planing that needed to be done. But all in all, each drawer fit like a glove. Just like it did on the computer.

In fact, the drawers fit so well that we ran into something unexpected — air pressure. As you pushed one drawer in, another would pop out, like the buttons on an old car radio.

The solution was simple enough. We drilled some holes in the back of the cabinet to allow the air to escape as you close the drawers. But it just goes to show you, that even with high-tech software, there's no substitute for making sawdust.

Terry

Woodsmith Readers' Gallery

Visit other *Woodsmith* subscribers' workshops, and see photos of the projects they've built. It's all online in the new Readers' Gallery on the *Woodsmith* web site: **www.Woodsmith.com**

We want you to be part of the Readers' Gallery! To submit photos of your favorite *Woodsmith* projects or views of your shop, follow the instructions you'll find at the Reader's Gallery.

A LOOK INSIDE

CONTENTS

Features

Bedroom Armoire 6

Whether it's storing a set of clothes or holding a TV and VCR, this armoire is sure to command attention. Our detailed construction plans walk you through the building process step by step. Plus, we came up with an optional top and base.

Water-Based Aniline Dyes 17

Add dramatic color to a project without covering the natural beauty of the wood grain. Learn what you need to know about water-based aniline dye to get great results on your next project.

Tabletop Display Case 20

With glass panels and distinctive "raised" moldings, friends may spend as much time admiring this case as its contents. We'll show you everything you need to build this heirloom-quality piece.

Shop-Tested Plywood Tips 26

Plywood is a great material for projects. But working with it can be tricky. We share our shop-tested tips for getting top-notch results when cutting, routing, edging, and assembling plywood.

Picture Frame 30

Even though you can build it in an afternoon, this is more than just a simple frame. For one thing, the frame is joined with mitered half laps. Plus, we'll show you how to use contrasting woods and veneers to give it any number of custom looks.

Mitered Half Laps 32

Here's a joint that combines the elegant look of a miter joint with the strength of a half lap. And our detailed instructions will ensure you're able to make this unique joint with confidence.

Departments

Tips & Techniques 4

Shop Notes 18

Sources 35

Bedroom Armoire *page 6*

Display Case *page 20*

Picture Frame *page 30*

TIPS & TECHNIQUES

Air Hose Caddy

I use one of those yellow coiled air hoses on my portable compressor for my brad nailer and air nozzle. This type of hose is compact and lightweight.

But if you've ever used a hose like this, you know that they can have a mind of their own, especially when you're trying to stow them out of the way.

My solution was to attach a length of 4" PVC pipe to the side of my compressor. The pipe is just the right size for the hose to coil up into, as you can see in the photo.

To mount the pipe to the compressor, start by drilling a pair of holes on the motor platform of your compressor, see Figs. 1 and 1a. Safety Note: Make sure you don't accidentally drill into the air tank of the compressor.

The next step is to mount a couple of eye bolts in the holes you just drilled. Then thread a 4" hose clamp through each eye bolt to hold the PVC pipe (Fig. 1a).

The last step is to make a small notch in the end of the pipe to hold the coupler fitting on the end of the hose (Fig. 2).

William Blume
Port Charlotte, Florida

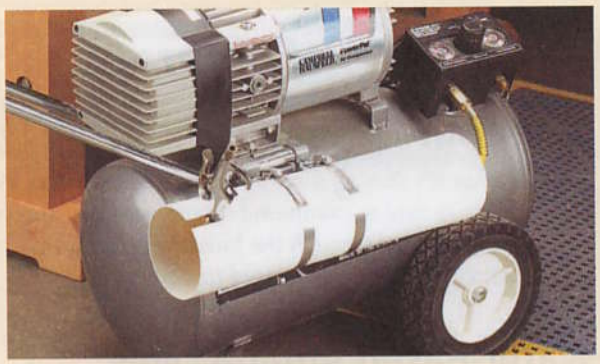

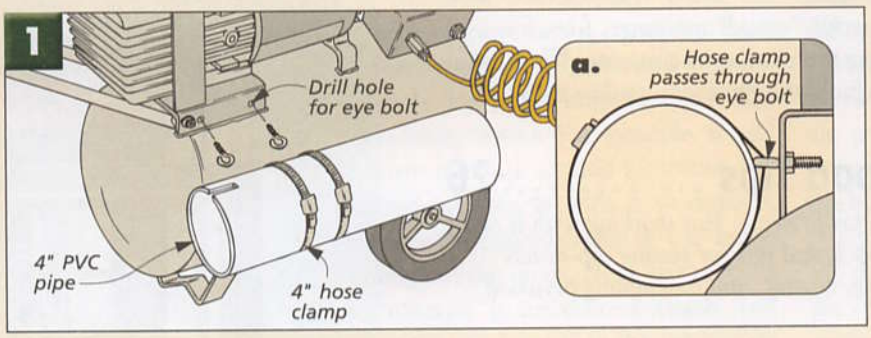

FREE
Online Tips

If you'd like even more woodworking tips, the solution is simple. Just visit us at our web site and sign up to receive a free tip via email every week.

www.woodsmith.com

"Kool-Aid" Stain

Recently, I was building some small, wooden toys. I wanted to make some colorful accents but didn't want to have to buy a whole set of wood dyes to do it. So I tried something else.

I used powdered drink mix *(Kool-Aid)*. I experimented with different flavors and mixed the powders in various strengths to get the shade I wanted. The drink mix stained the wood just like a water dye. (Just make sure to use the small packets — the ones without sugar.)

Mark McPherson
Hutchinson, Kansas

Small Clamp Holder

I used to keep my small spring clamps and bar clamps on a shelf. But it seemed that every time I wanted to use them I'd have to sift through a tangled pile to find the size I needed. So I came up with a quick solution to keep them all organized and within reach.

As you can see in the drawing below, I just hung a couple of pieces of ¼" plywood from the rafters of my basement shop. By clipping the clamps to the plywood, I can keep them organized and handy.

Steve Bassindale
Oromocto, New Brunswick

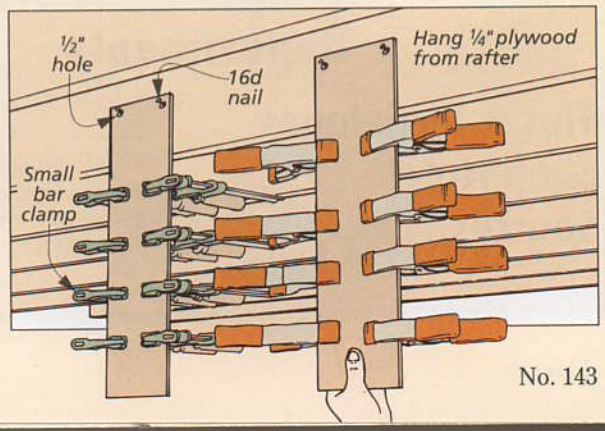

Router Stand

One of the things I don't like about using a hand-held router is having to wait for the bit to stop spinning before setting the router down on my workbench. To solve this problem, I made this small stand that allows me to set the router down without having to wait for the bit to come to a complete stop first.

To make the stand, I started by cutting a pair of 8" squares out of ¾" plywood. Then I cut a hole in one of these pieces to match the diameter of the base of my router, as you can see in Fig. 1.

Next, I cut four spacers from some 1½"-thick stock. I made the spacers big enough so that they extend past the opening in the top layer of the stand, see Fig. 1a. Then the spacers get sandwiched in between the two pieces of plywood, see Fig. 1b.

To use the stand, all you have to do is set the router in the opening in the top. The spacers support the router and keep it raised up so the bit doesn't touch anything. This way, I can set the router down even before the bit has finished winding down to a stop.

Carl Schmidt
Bothell, Washington

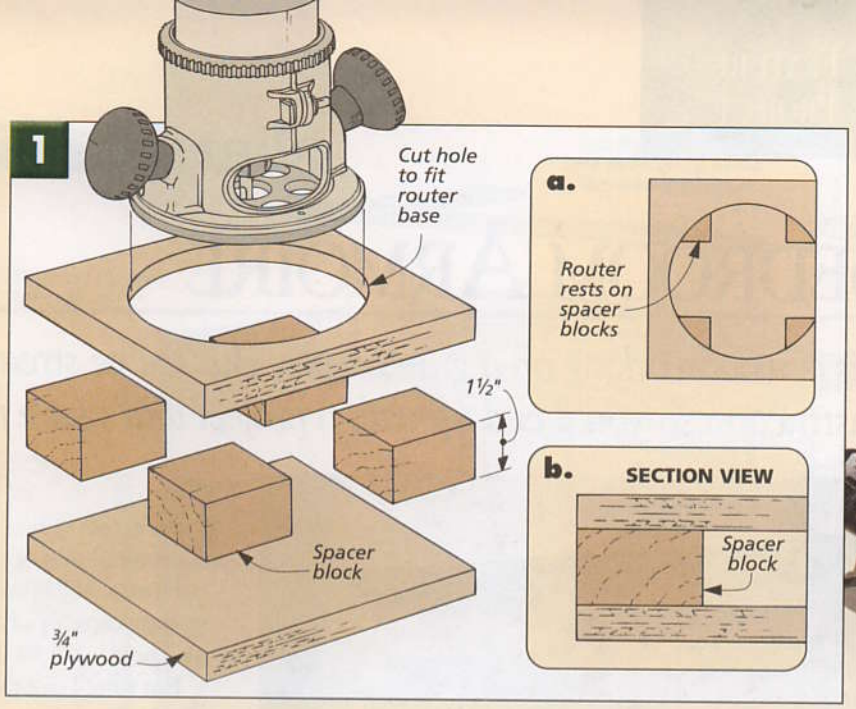

▼ *This stand allows you to set your router down even before the bit stops.*

Disc Alignment Tool

The dust collection on my disc sander works great—but only if you have the holes in the sanding disc lined up with the holes in the pad on the sander. And getting them lined up isn't always as easy as it looks.

To make alignment of the holes automatic, I came up with this simple tool. As shown in Fig. 1, it's really just a small block of wood with a pair of dowels glued in it. The dowels fit through the holes in the sanding disc and then into the holes in the sanding pad.

To make the tool, I started by cutting a block from some ¾"-thick stock. The exact size of the block isn't too important. (I made mine ¾" square and about as long as the diameter of the sanding discs.)

I used one of the sanding discs to lay out the location of the dowel holes in the block. After marking out the locations, you can drill the holes for the dowels.

The next step is to cut a couple of short pieces of dowel to fit into the holes. Before gluing the dowels in place, I chamfered the end of each one (Fig. 1a). This will make it easier to fit the sandpaper discs over the dowel pins.

To use the tool, simply put a sanding disc over the dowel pins. Then just align the dowel pins with the vacuum holes in the sanding pad (Fig. 2).

E.J. Davenport
Waynesville, North Carolina

SUBMIT YOUR TIPS

If you have an original shop tip, we would like to hear from you and consider publishing your tip in one or more of our publications. Just write down your tip and mail it to: *Woodsmith*, Tips and Techniques, 2200 Grand Avenue, Des Moines, Iowa 50312. Please include your name, address, and daytime phone number in case we have any questions. If you would like, FAX it to us at 515-282-6741 or send us an email message at: woodsmith@woodsmith.com. We will pay up to $200 if we publish your tip.

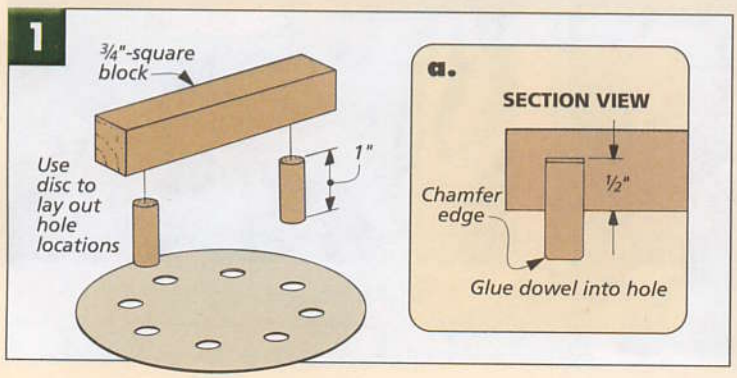

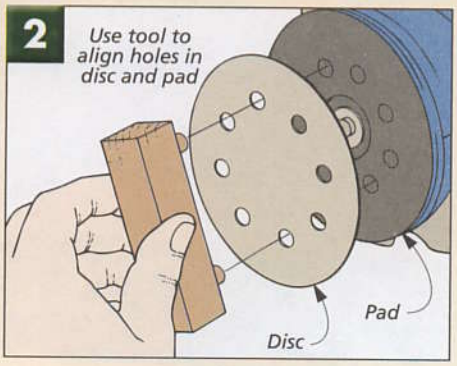

BEDROOM ARMOIRE

This is woodworking on a grand scale. But we've streamlined the construction so you'll end up with a project that's sure to impress.

This is one impressive piece of furniture. It's a beautiful mix of uncluttered lines and elegant contrasts. And at six feet tall, this armoire has the storage capacity of a small closet — though it will also hold a 27" TV (and VCR) quite comfortably.

But what I like most is that for a large project, this bedroom armoire isn't all that complicated to build. It's just a large plywood box with plywood divider panels that create the door and drawer openings. So there are no hardwood panels to glue up and flatten. No web frames to make. No wood movement to worry about. And you can find plenty of tips on building with plywood in the article that begins on page 26.

The doors and drawers on this armoire were also designed to be as easy to build as possible. The inset doors are built with stub tenon and groove joinery and are hung on concealed (European-style) hinges, so they are easy to install — and fully adjustable. Plus, the four drawers are built with a locking rabbet joint, so you won't need a dovetail jig.

Even the darker cherry accents are no problem. They're stained with aniline dyes, which allow you to get a dark color without hiding any grain. (More on that in the article on page 17.)

▲ *The 1/4" plywood door panels look as good on the inside as they do on the outside. To see how this is done, turn to page 12.*

Construction Details

OVERALL DIMENSIONS:
72"H x 38"W x 25¾"D

Top front and sides are mitered to avoid exposed end grain

Stopped mortise for case rail

All six dividers are identical

Inset doors hang on 170°, self-closing concealed hinges

DIVIDER

ADJUSTABLE SHELF

DOOR RAIL

Rail stiffens case

1¼" wood pull

HORIZONTAL DIVIDER

DOOR STILE

DIVIDER

Door panels are ¼" plywood set back to back

Dadoes in sides cut after edging is attached

Upper and lower backs are made up of two ¼" plywood panels

NOTE: For a different top molding and base option, see page 16

DRAWER STOP

Drawers built with locking rabbet joint

Case attached to base through corner blocks

NOTE: Top, base, and pulls darkened with aniline dye, see page 17

FRONT RAIL

SIDE RAIL

All plywood panels are edged with ¾" x ¼" solid-wood strips

Base assembled with mortise and tenon joints

NOTE: Materials list and cutting diagram included on page 15

◄ *The concealed hinges used here are easy to install and adjust (as described in the box on page 13). And since they open 170°, the doors will never be in the way.*

Case

With this armoire, the case is the obvious place to start. And it's pretty easy to see what's going on. The plywood sides are joined by six dividers — the top and bottom panels forming the top and bottom of the case and the other four creating the door and drawer openings.

What's a little easier to miss is the hardwood rail at the top of the case. This piece stiffens the case so it won't be as likely to rack. But more on that in a minute.

SIDES & DIVIDERS. The first thing to do is to work on the *sides (A)* and *dividers (B)*, as in Fig. 1. There are three things to do with each of these plywood panels.

First, they need to be cut to final size. (A plywood cutting diagram has been included on page 15.) Second, you need to glue an oversized strip of 1/4"-thick *edging (C)* to the front edge of each panel, as shown in Fig. 1b. Finally, the edging needs to be trimmed flush with the faces and ends of the panel, as you can see in the margin photo at left.

▲ *Here's a quick way to support a router base when trimming edging flush. For more plywood tips, turn to page 26.*

All three of these steps are common challenges when you're working with plywood, and you'll find a number of solutions for each one in the tip article beginning on page 26.

DADOES. With all the edging trimmed flush, I did some work on the sides. To hold the dividers, first a series of dadoes needs to be cut across the sides. And since these panels are too big to handle safely and accurately at the table saw, I decided to rout them, as in Fig. 2.

The important thing here is to end up with "pairs" of dadoes that will line up across from each other. And to do this, I clamped the side panels together front edge to front edge. This way, each pair of dadoes could be routed at the same time, using a 3/8" straight bit and the edge

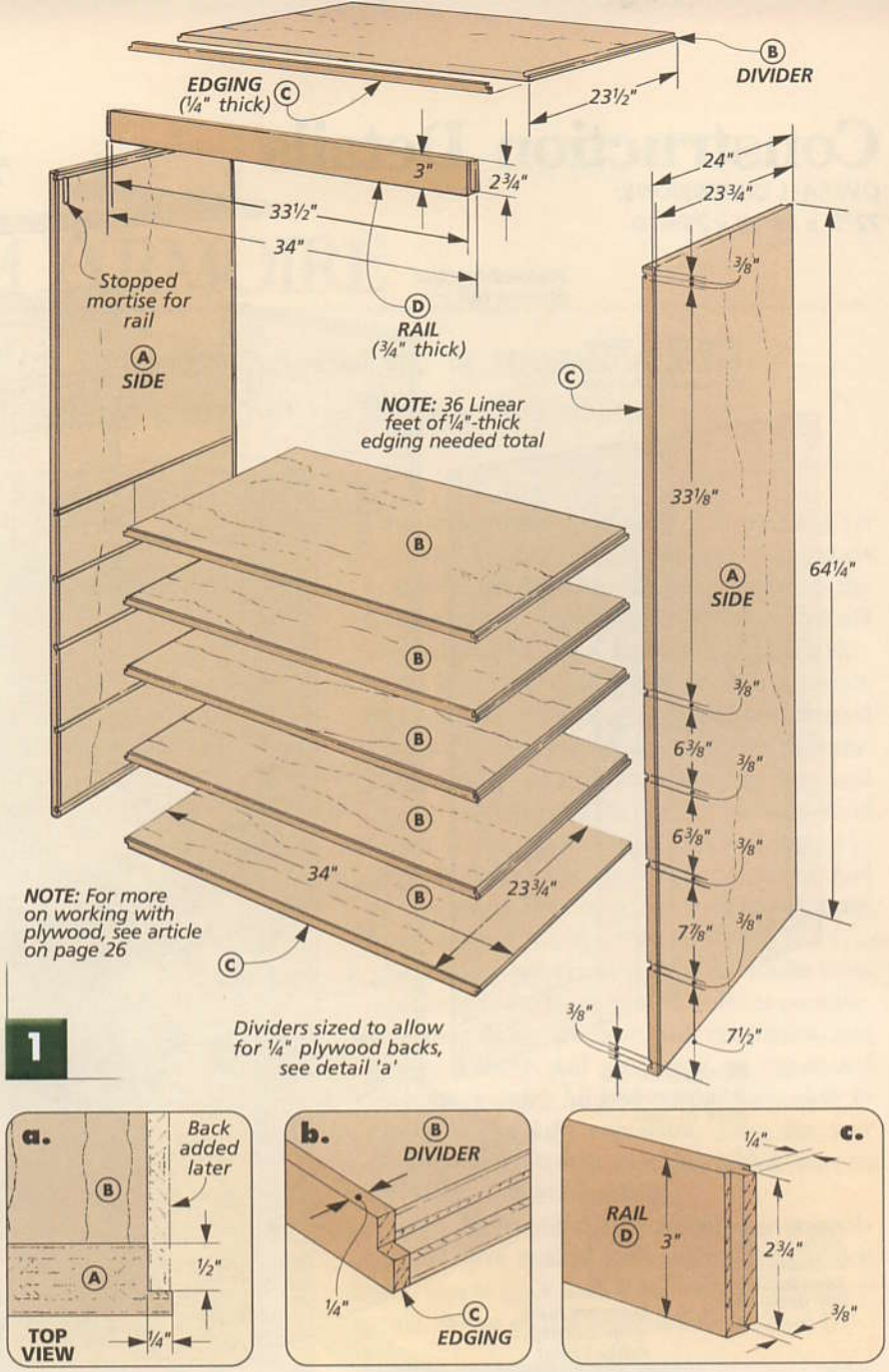

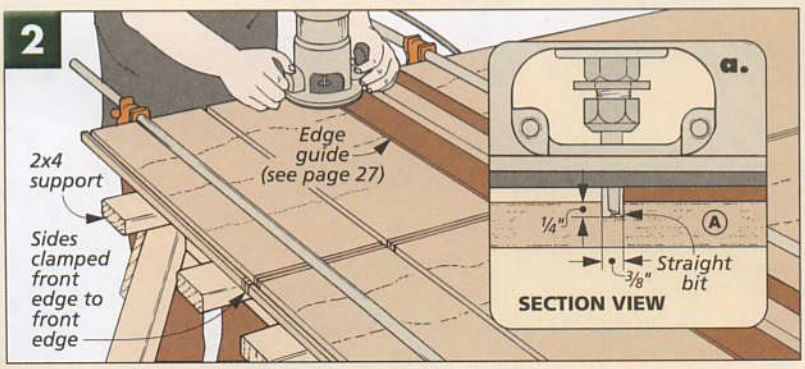

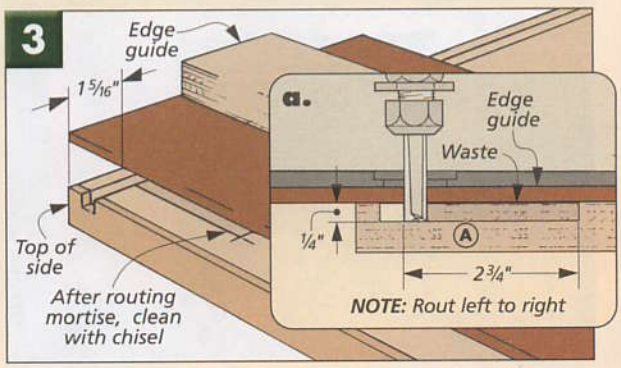

guide shown. (To make this guide, check out the box on page 27.)

MORTISES. When the dadoes for the dividers have been routed, there's one more thing to rout. This is a stopped mortise for the rail that will be added later, as in Fig. 3. You can do this with the same edge guide and router bit you used earlier. But this short mortise only goes from the dado for the top divider to a layout line. And you'll need to square up the end with a chisel.

RABBETS. The next thing to do to the sides is to rabbet their back edges to hold 1/4" plywood backs (Fig. 1a). This time, it's easy enough to make the cut at the table saw, with a dado blade buried in an auxiliary fence.

TONGUES. Now it's time to do a little work on the dividers. All that needs to be done here is to create tongues to fit the dadoes in the side panels. And as you can see in Fig. 4, this is done by cutting some rabbets.

CASE RAIL. All the panels are complete at this point, but before you can assemble the case, you need to make the *rail (D)*, as in Fig. 1. This 3/4"-thick brace is cut the same length as the dividers (34"). It prevents the case from racking and will also act as a stop for the doors.

Once the rail is cut to size, you can work on the stub tenon on each end. I did this with the piece laying down, making multiple passes over a regular blade, as in Fig. 5. Sneak up on the size of the tenons so they fit into the stopped dadoes in the case sides. Just remember that there's no shoulder on top of the rail, as you can see in Fig. 1c.

ASSEMBLY. With the rail piece complete, you're ready to assemble the case (Fig. 6). As with any large case, this is easily the most challenging part of the project, but I have a few pointers that should help.

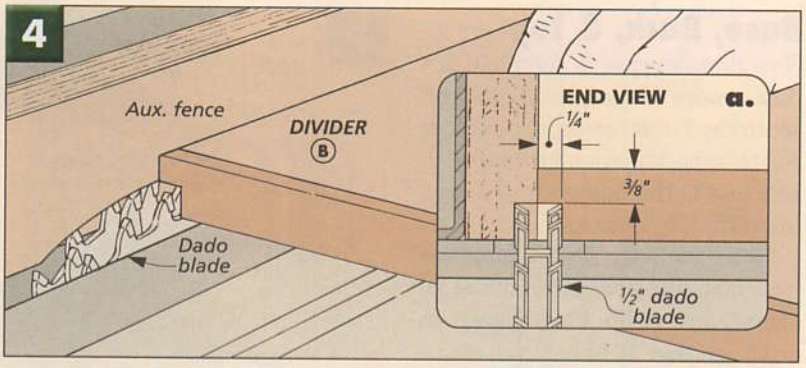

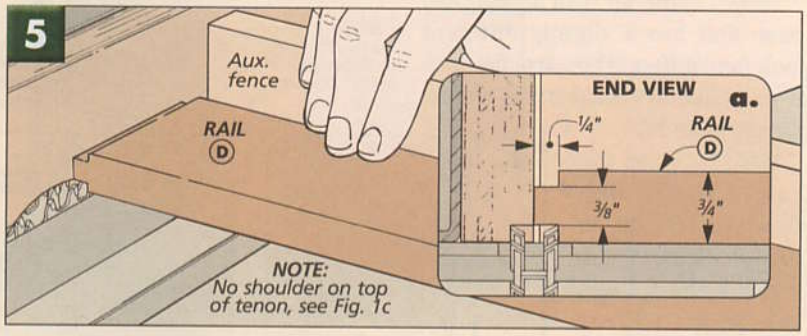

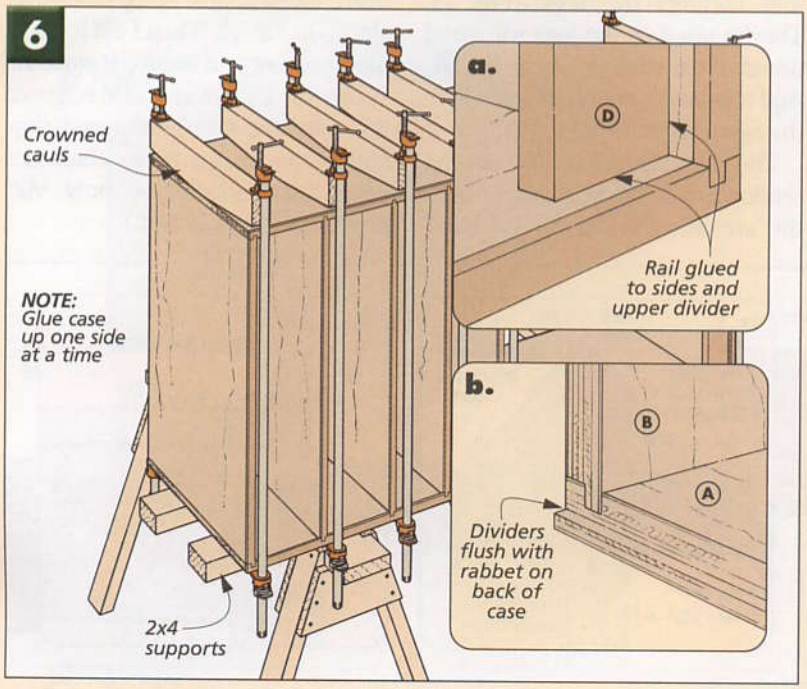

First, unless you have a large, flat bench, the first thing to do is create a temporary worksurface. This can be as simple as a pair of sawhorses and some 2x4s. (Try to get them as level as possible.)

I laid one side on the 2x4s and then set the dividers and rail in place. Check that all the panels are flush along the front edge. Then you can add the second side. (It's best to have a helper for this step.)

To apply consistent pressure across the width of the sides, I added crowned cauls, as you can see in Fig. 6. But there's more about this and another assembly tip I used in the plywood article on page 26.

Before you apply any glue, check that the dividers aren't sticking past the rabbet in the back, as in Fig. 6b. Also, now's a good time to check the case with a square. If it's not square, try repositioning the clamps or racking the case slightly until you have it as square as possible.

I actually glued up the case in three steps. First, I glued the rail to the top divider (Fig. 6a). Then I glued the side panel "on top" to the dividers and rail, checking the assembly for square again. Finally, when the glue was dry, I flipped the assembly over and glued the other side panel in place.

Base, Back, & Top

Now that the case is complete, it's time to work on the base. As you can see in Fig. 7, this base is just four legs and rails that are assembled and then screwed to the bottom of the case through corner blocks.

To highlight the base, I darkened it with aniline dye. This isn't at all complicated to do. Plus, there's an article on page 17 to help you out.

Also, I came up with an optional base that has a slightly different look (and different construction), so if you'd like to consider this option, turn to page 16.

LEGS. To build the base, I started with the *legs (E)*, as in Fig. 7. Since these legs are short, I was able to get all four out of a 2"-square turning blank (30" long). But you could also laminate three, ¾"-thick blanks together. Regardless, what you want to end up with are leg pieces that have been planed down to 1¾" square and have been cut 7" long.

With the legs cut to size, the next thing to do is make mortises for the rails, as shown in Fig. 7c. I like to do this by drilling overlapping holes at the drill press and then cleaning them up with a sharp chisel.

The only other thing to do is to rout ⅛" chamfers on the *ends* of the legs. I routed all four bottom edges of each leg but only the two outside edges on the top end (the ones opposite the mortises).

RAILS. Now it's time for the *front (F)*, *back (F)*, and *side rails (G)* that connect the legs (Fig. 7). They're sized so the legs will stand proud of the case ¼", as in Fig. 9b. And tenons are cut on the rails to fit the mortises in the legs (Fig. 7a).

The only thing left is to cut the shallow arc on the front rail. I traced the arc using a strip of ⅛" hardboard and a couple scrap blocks, as shown in Fig. 7b. Then I cut it out at the band saw and sanded it smooth.

Like the legs, the outside edges of the rails are also chamfered (top and bottom). But these chamfers are a little smaller — only 1/16" instead of ⅛", as in Fig. 7.

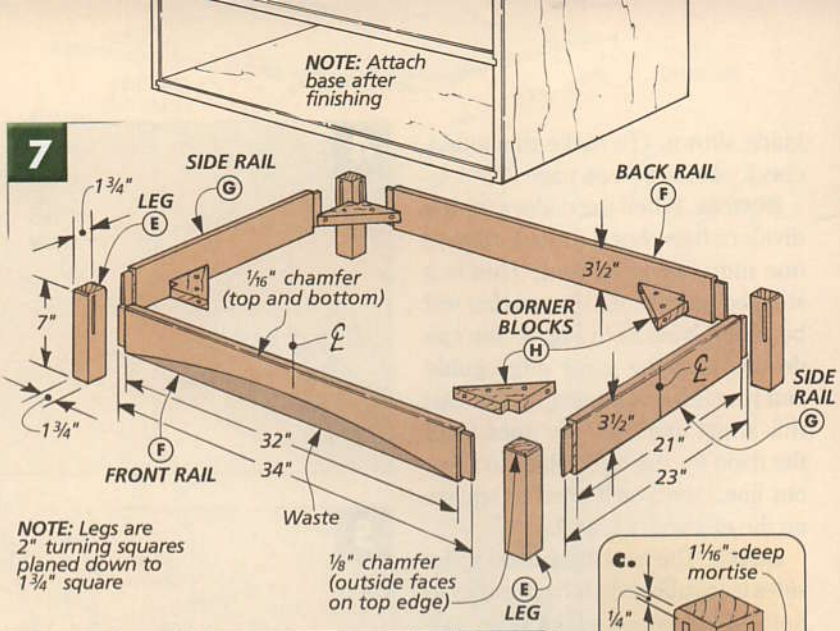

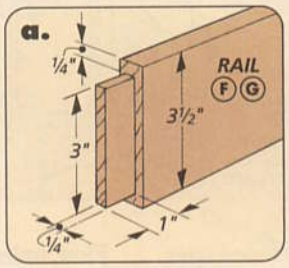

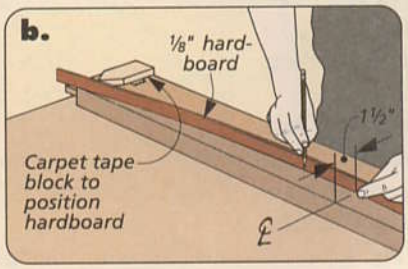

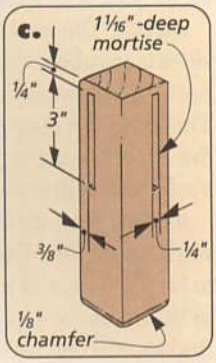

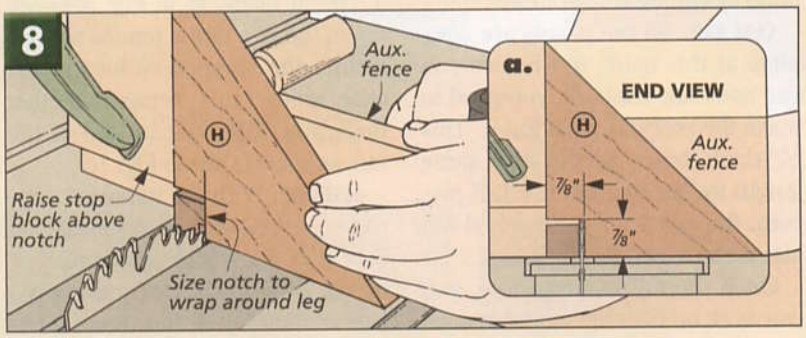

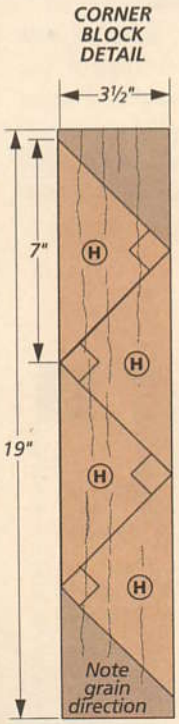

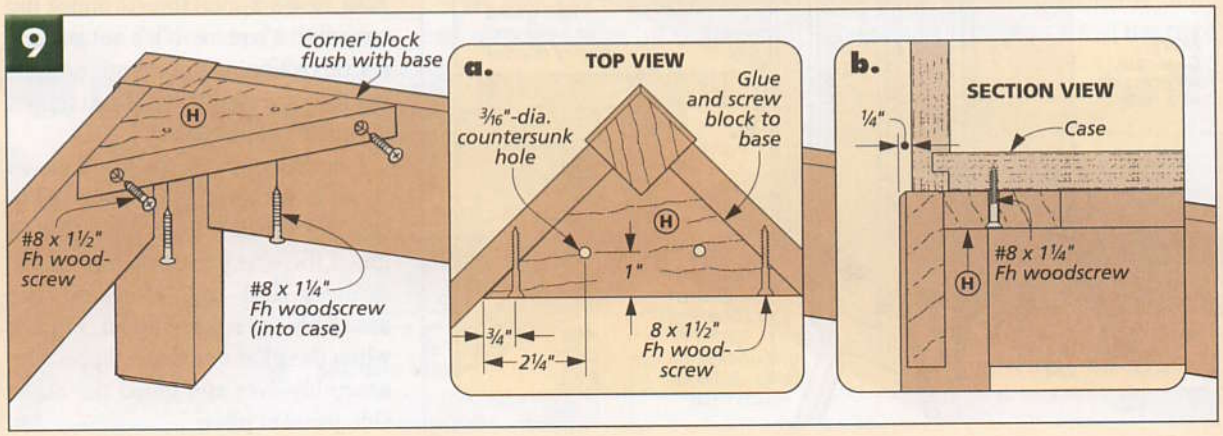

ASSEMBLY. At this point, the legs and rails can be glued together. But there's still no easy way to connect the base to the case — that's the job of the corner blocks in Fig. 9.

CORNER BLOCKS. To cut the *corner blocks (H)* to size, I made miter cuts in a 3½"-wide blank, as shown in the left margin. Then I cut a notch to fit around the leg, as shown in Fig. 8. This is easy enough to do by making two passes, using an auxiliary miter gauge fence and a stop block to support the piece.

With the notches cut, the only thing left to do is drill countersunk shank holes for attaching the base to the case, as in Figs. 9a and 9b.

To attach each block, I clamped it flush with the top edges of the base. Then I drilled pilot holes through the block and into the rails. (Be careful that you don't drill through the rails.) After applying glue to the edges of the block, it can be clamped back to the base and screwed in place, as in Fig. 9a.

Screwing the base to the case is a little more awkward than you might think. First, you will need to carefully turn the case upside down. Then the base can be centered on top of it and screwed down. But if you're planning on staining the base different than the case, you'll want to wait to do this until after the finish is dry.

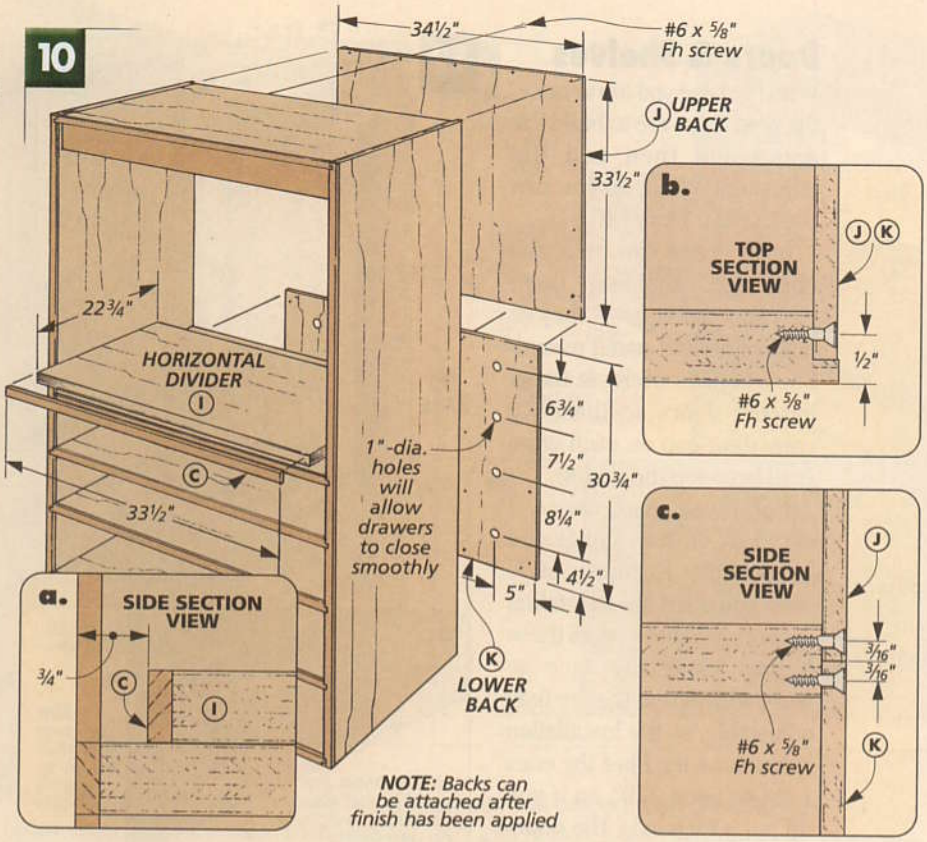

DIVIDER & BACKS. The next thing I did was to add a horizontal divider and the upper and lower backs, as you can see in Fig. 10.

The *horizontal divider (I)* is just a ¾" plywood panel with ¼" edging glued to the front edge. It serves to reinforce the divider (if a TV is set on it) and also acts a stop for the doors. Because of this, it's sized to set back from the front edge of the case ¾", as shown in Fig. 10a.

The *upper (J)* and *lower backs (K)* are ¼" plywood panels cut to fit in the rabbets in the back. As you can see in Fig. 10, I also drilled holes in the lower back so the drawers will be easier to open and shut.

The backs will be screwed in place (Figs. 10b and 10c), but like the base, you may want to wait until the drawers have been built and the finish has been applied.

TOP. Now you're ready to add the top of the case. This is really just three pieces of molding that wrap around the front and sides. And like the base, there's also an optional design to consider that will be described on page 16.

The only thing to do with the *top front (L)* and *sides (M)* is to miter them to length so they overhang the case 1½", as in Fig. 11b. Then rout a 1/16" chamfer around the outside edges. But like the base, you'll want to wait to screw the pieces in place until after the finishing is complete.

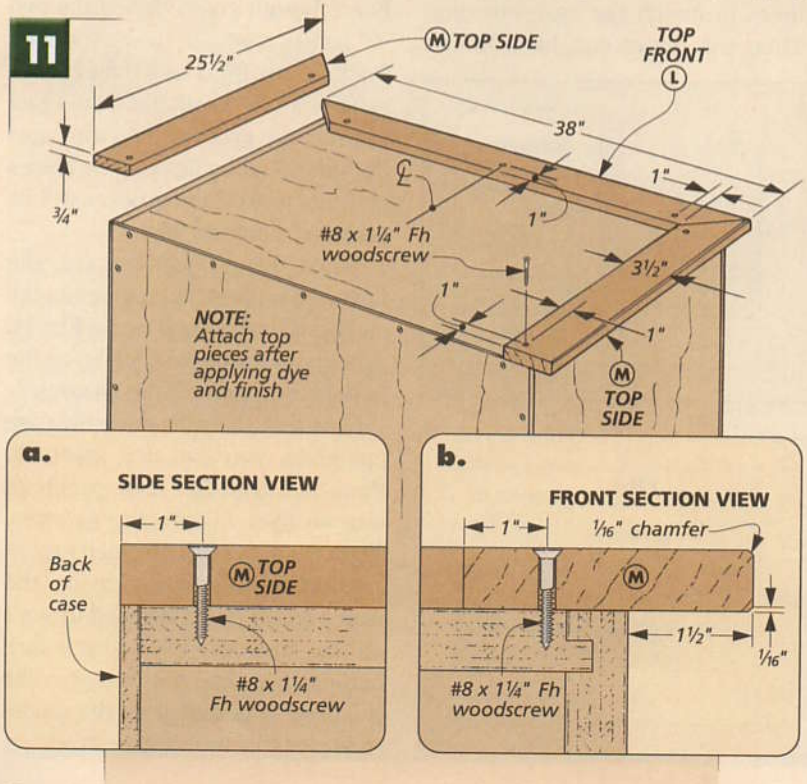

Doors & Shelves

With the base and top in place, the next steps are to build the doors and then add the adjustable shelf, as you can see in Figs. 12 and 16.

Inset doors can be a real challenge. Building them isn't the problem — they're just frame and panel assemblies. What's tricky is hanging the doors so there's a consistent gap on each edge (and between the doors).

For these inset doors, I decided to use concealed hinges (the European-style ones you often see in kitchen cabinets). What makes these hinges especially nice to work with is that they're fully adjustable, so the installation is much easier. Plus, the ones I chose open 170°, so if you do put a TV inside, the doors won't be in the way.

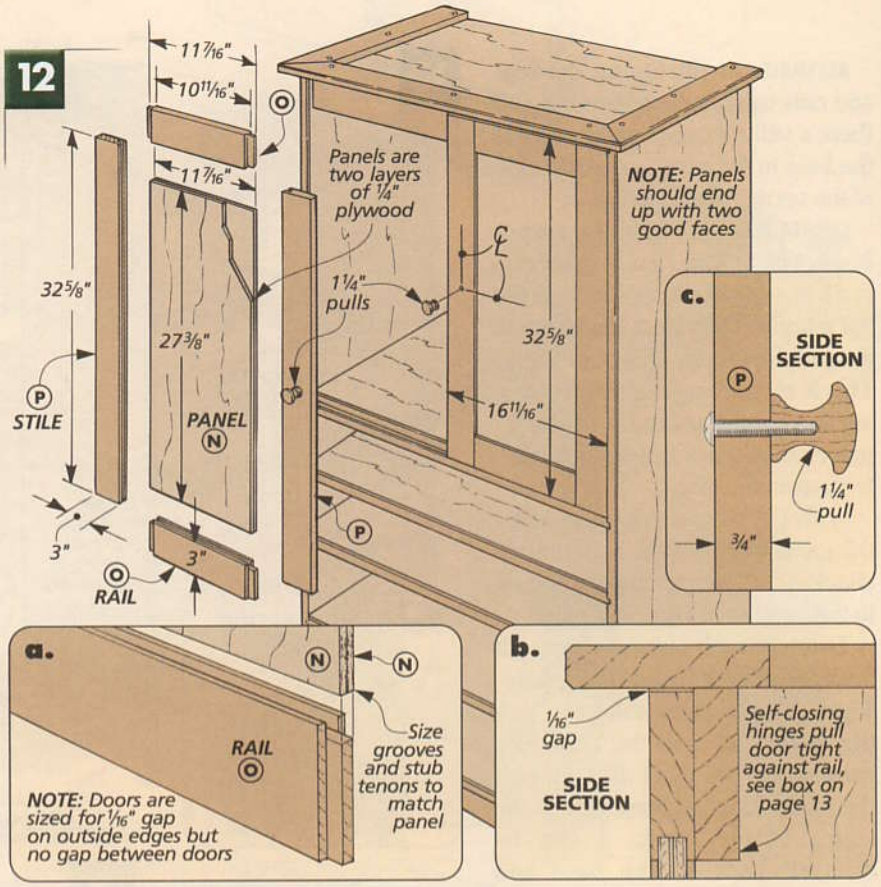

DOOR PANELS. Since these doors could spend much of their time wide open, I wanted them to look as good on the inside as they do on the outside. So instead of a single 1/4" plywood panel, I cut two oversized *door panels (N)* and glued them back-to-back, as indicated in Figs. 12 and 12a. This way, the panels ended up with two good faces.

RAILS & STILES. With the panels glued together, I sized the *door rails (O)* and *stiles (P)*, as in Fig. 12. The dimensions given here allow for a 1/16" gap on the outside edges of (but not between) the doors. However, you may want to build them to match the case opening. Then the doors can be trimmed later to create consistent gaps. (This is especially important if your case opening isn't perfectly square.)

When the rails and stiles are cut to size, the next thing to do is cut the grooves to hold the plywood panels you glued up earlier, as in Fig. 13. Even though you've glued the two 1/4" panels together, their combined thickness will be less than 1/2", so you'll want to sneak up on the exact width of the grooves until the panel fits snug. And by flipping the pieces between passes, the grooves will be centered automatically.

When the grooves are cut, the next step is to cut stub tenons on the ends of the rails, as shown in Fig. 14. Again, you'll want to sneak up on the fit until the tenons fit the grooves.

Now that the rails and stiles are complete, you can dry assemble them and trim the door panels to size so they fit into the grooves. Then the doors can be glued up.

SHELVES. While the glue on the doors was drying, I decided to work on the adjustable shelf. But before cutting it to size, a series of holes will need to be drilled for the spoon-style pins that the shelf rests on.

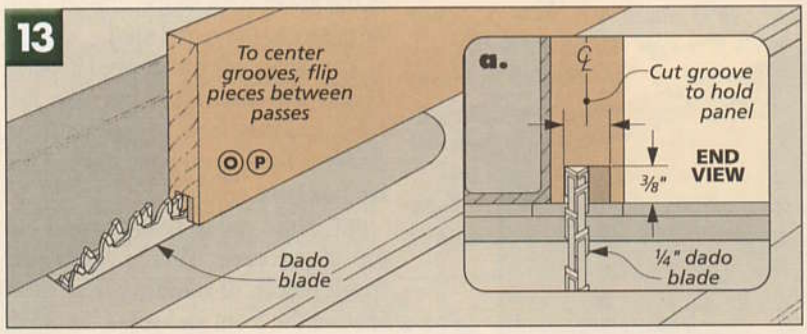

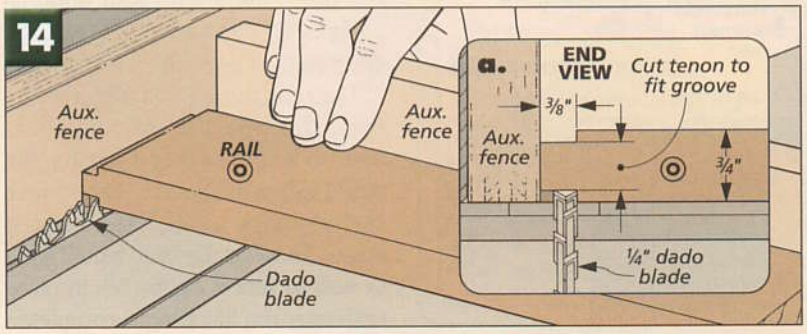

As you can see in Fig. 15, I drilled the holes with the help of a shop-made drilling jig. This is just a 6"-wide piece of 1/4" hardboard with a series of holes drilled 2" apart. Since these holes are centered, the jig works at both the back and front of the case. And the only thing you have to be careful of is not drilling through the plywood. (The holes should be about 3/8" deep.)

With the holes drilled, next I cut the *adjustable shelf (Q)* to size, as shown in Fig. 16. Like the horizontal divider panel you added to the case earlier, this shelf is just a 3/4" plywood panel with 1/4" edging on the front, and it should be sized to set back from the front of the case 1" and to have a 1/8" gap at each side.

MOUNT DOORS. At this point, you're ready to mount the doors, and the first step is to level the case with shims. (Even a case this big will rack some.) Then you can set the doors in the case and check the fit. (A penny at each bottom corner will create a 1/16" gap under the door.)

It's also a good idea to check the gaps around the doors. If they're not consistent, you'll need to mark them and then sand or trim the edges. Don't worry about the gap *between* the doors until both have been hung.

Mounting the hinges is pretty straightforward, and this is covered in the box below. When both doors are on, you can work on creating the 1/16" gap between the two doors.

The hinges are self-closing, so you won't need door catches. Just add felt dots so the doors close quietly (as in the photo on page 7). Then drill the holes for the pulls (Fig. 12c).

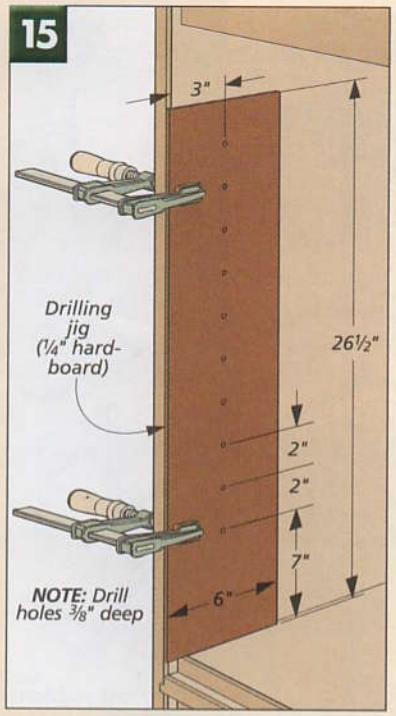

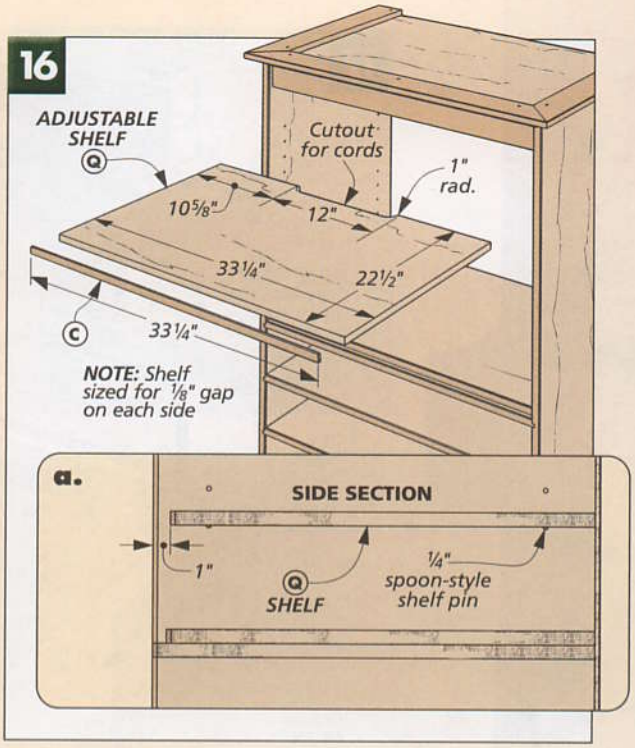

CONCEALED HINGES

Concealed or European-style hinges look complicated, but they're really easy to install. And once in place, they can be adjusted in three directions: in and out, up and down, and side to side. All with just a screwdriver.

These hinges actually come in two parts (which you may need to order separately, as described on page 35). The actual hinge (shown above) will be attached to the door. It snaps onto a mounting plate that will be attached to the case.

The first step is to mount the hinge half to the door. To do this, you'll need a 35mm (1 3/8") Forstner bit, as in Fig. 1. Lay out the position of the hole carefully and drill a 1/2"-deep hole (Fig. 1a). Then you can set the cup of the hinge into the hole, square it up, and screw it in place.

For the mounting plate, simply set the door in place and then reach in and mark the locations of the mounting holes, as shown in Fig. 2. Then you can remove the plate and screw it in place, again making sure it's square to the edges of the case.

As you shut the door, you'll probably find that you need to make a few adjustments to position the door. There are three screws for making these adjustments — each one moving the door in a different direction. And as I mentioned, all you need for this is a screwdriver.

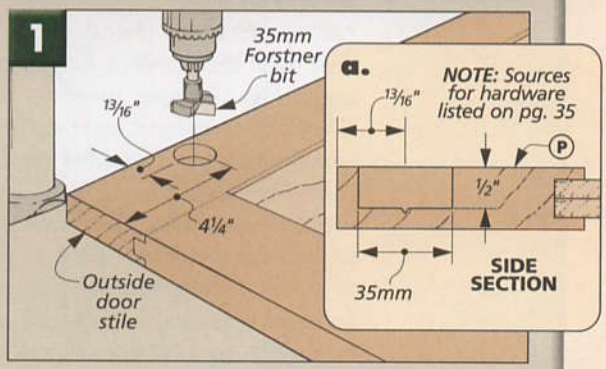

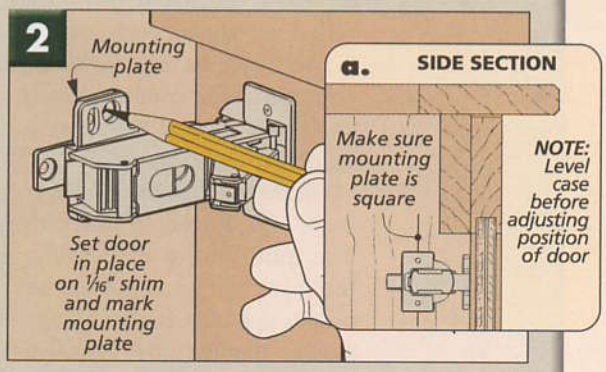

▲ *Unlike the doors, there's no fancy hardware for these drawers. They slide in and out on nylon glide tape.*

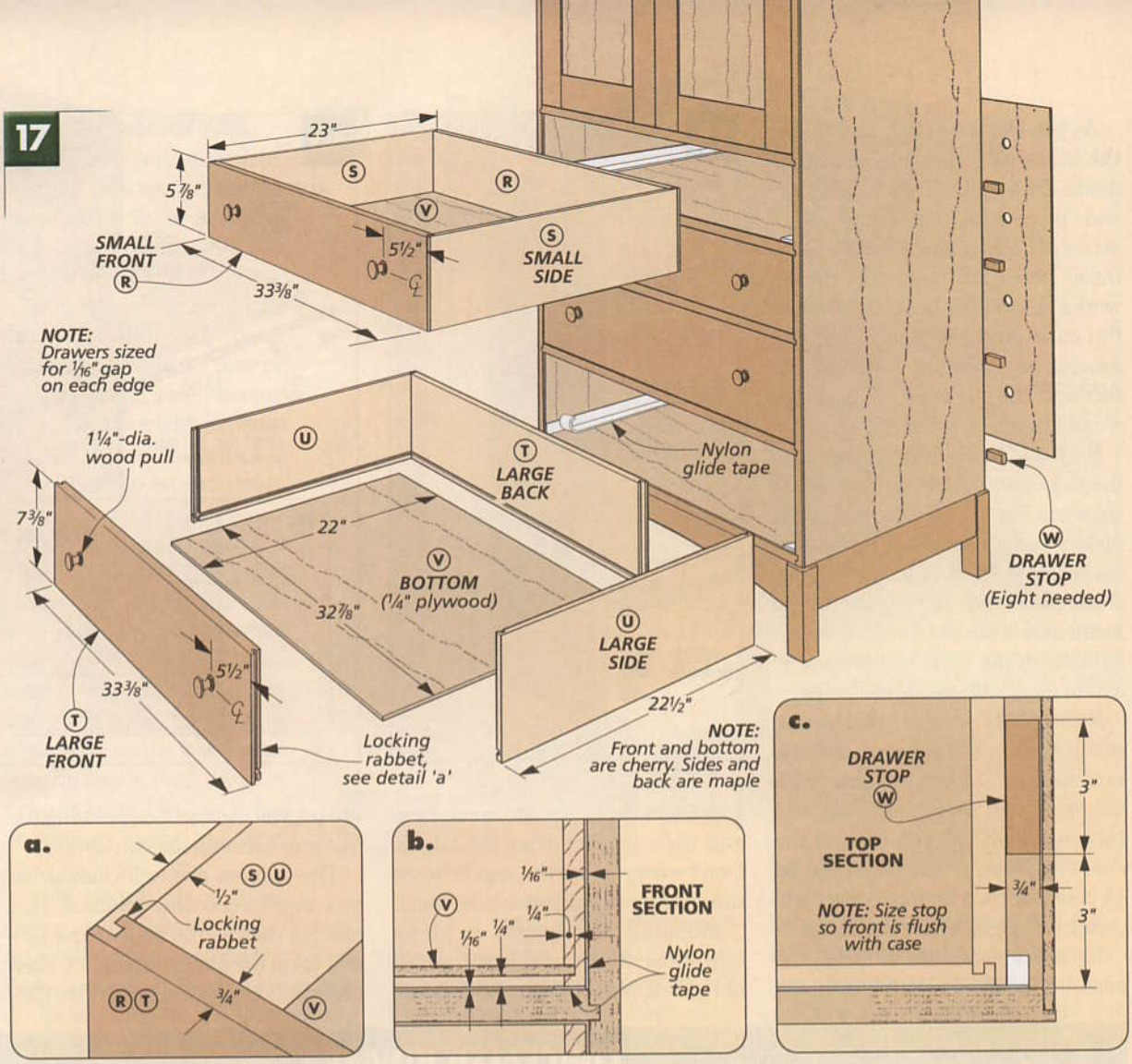

Drawers

All that's left to complete the armoire is to build the drawers. As you can see in Fig. 17 above, there are two sizes of drawers here, and they're all joined with a locking rabbet joint, as shown in Fig. 17a.

SIZE DRAWER PARTS. The first thing to do is cut the drawer parts to size (Fig. 17). I made the *small fronts* and *backs (R)* and *large fronts* and *backs (T)* from ¾"-thick stock, sizing them to match the openings with a 1/16" gap on each edge. (I like to use maple for drawer backs and sides because it contrasts nicely, but you can also use cherry or a less expensive wood like poplar.)

For the *small sides (S)* and *large sides (U)*, I used ½"-thick maple. The width of the sides will match the front and back pieces, but the length is a little harder to figure. I simply cut mine 22½" long. This left a ¾" gap in the back of the drawer, which allows room for a couple of drawer stops, as shown in Fig. 17c.

LOCKING RABBET JOINT. As I mentioned, the drawers are joined with a locking rabbet. It's a fairly strong joint that's cut in three steps.

The first thing to do is cut a slot across the ends of the front and back pieces, as in Fig. 18. The height of this slot should match the thickness of the sides (½"). The trick here is holding the long pieces on end as you push them across the dado blade. To help with this, I added a tall auxiliary fence. Plus, a backer board will prevent any chipout at the end of the cut.

The next step is to lay the pieces down and create a short tongue, as shown in Fig. 19. To do this, just sneak up on the fence setting until the tongue is ¼" long (Fig. 19a).

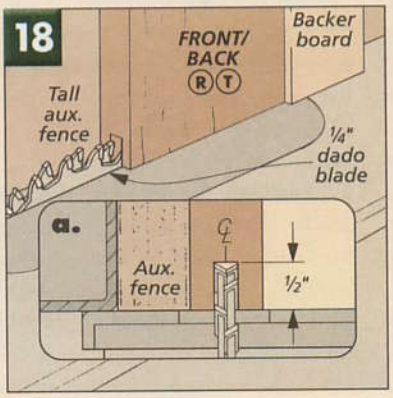

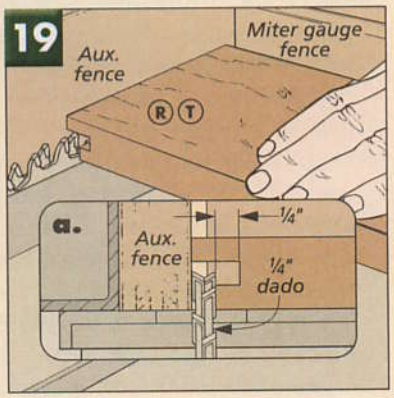

The last step is to cut the dado on the side pieces (Fig. 20). Here's where you want to use a test piece. But be careful. If the fit is too tight, the small tongue can break if you force the side onto the front.

Before assembling the drawers, you will need to cut grooves for the 1/4" plywood *bottoms (V)*, as shown in Fig. 17b. Then when these panels are cut to size (they're all identical), you can glue up the drawers.

There are just a few odds and ends left. First, the holes for the pulls can be drilled. (You'll want to wait to add the pulls until after the finish has been applied.) Then I added nylon glide tape to the case so the drawers would slide smoothly (Fig. 17b). And finally, I added a pair of *stops (W)* behind each drawer (Fig. 17c). These are sized so the front of each drawer ends up flush with the case when shut.

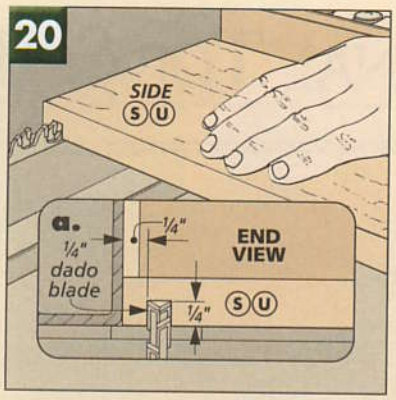

MATERIALS, SUPPLIES & CUTTING DIAGRAM

A Sides (2)	3/4 ply. x 23 3/4 - 64 1/4	
B Dividers (6)	3/4 ply. x 23 1/2 - 34	
C Edging	1/4 x 3/4 - 36 ln. ft.	
D Rail (1)	3/4 x 3 - 34	
E Base Legs (4)	1 3/4 x 1 3/4 - 7	
F Front/Back Rails (2)	3/4 x 3 1/2 - 34	
G Side Rails (2)	3/4 x 3 1/2 - 23	
H Corner Blocks (4)	3/4 x 3 1/2 - 7	
I Horiz. Divider (1)	3/4 ply. x 22 3/4 - 33 1/2	
J Upper Back (1)	1/4 ply. x 34 1/2 - 33 1/2	
K Lower Back (1)	1/4 ply. x 34 1/2 - 30 3/4	
L Top Front (1)	3/4 x 3 1/2 - 38	
M Top Sides (2)	3/4 x 3 1/2 - 25 1/2	
N Door Panels (4)	1/4 ply. x 11 7/16 - 27 3/8	
O Door Rails (4)	3/4 x 3 - 11 7/16	
P Door Stiles (4)	3/4 x 3 - 32 5/8	
Q Adj. Shelf (1)	3/4 ply. x 22 1/2 - 33 1/4	
R Sm. Dwr. Fr./Bk. (4)	3/4 x 5 7/8 - 33 3/8	
S Sm. Dwr. Sides (4)	1/2 x 5 7/8 - 22 1/2	
T Lg. Dwr. Fr./Bk. (4)	3/4 x 7 3/8 - 33 3/8	
U Lg. Dwr. Sides (4)	1/2 x 7 3/8 - 22 1/2	
V Dwr. Bottoms (4)	1/4 ply. x 22 - 32 7/8	
W Drawer Stops (8)	3/4 x 3/4 - 3	

- (15) #8 x 1 1/4" Fh Woodscrews
- (36) #6 x 5/8" Fh Woodscrews
- (8) #8 x 1 1/2" Fh Woodscrews
- (10) 1 1/4" Wood Pulls w/Screws
- (2 pair) 170° Self-Closing Hinges
- (4) 1/4" Shelf Pins
- (1) Nylon Glide Tape (32 ln. ft.)
- (4) 1/2"-Dia. Felt Dots

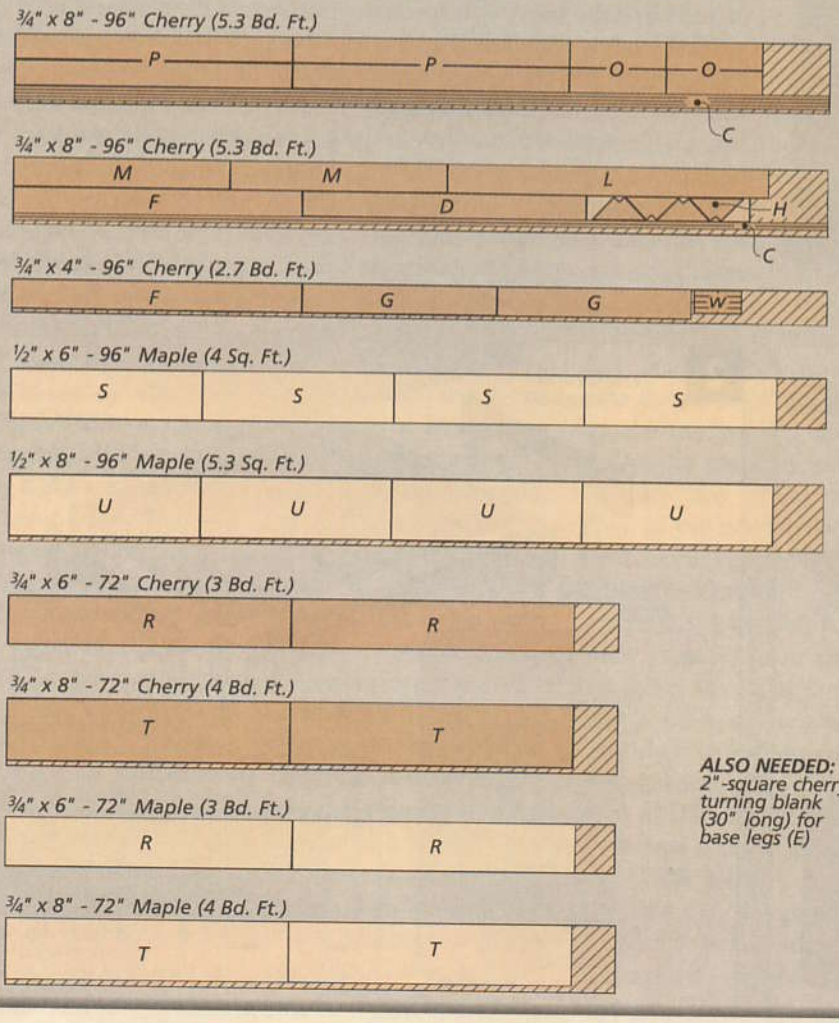

ALSO NEEDED: 2"-square cherry turning blank (30" long) for base legs (E)

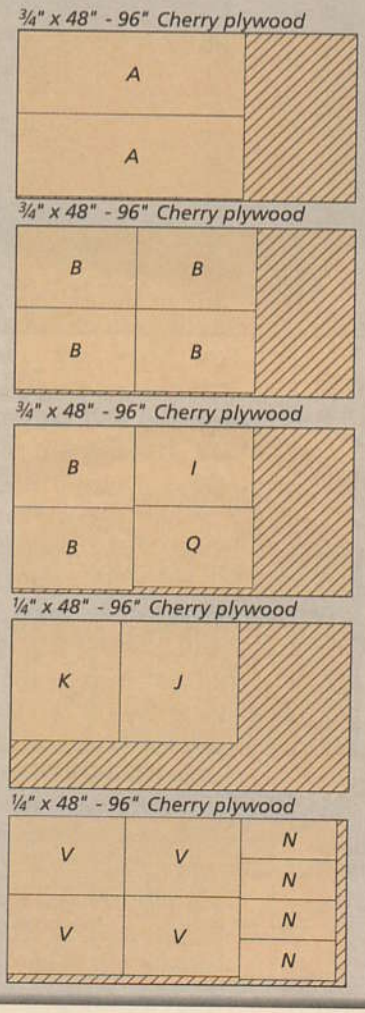

Optional Top & Base

When building a project, it's always nice to have a few options. This way, you can choose those details that will look best in your home. And sometimes, these options inspire you to come up with a few of your own ideas.

With that in mind, here are a couple of design options you might want to consider for the top and base of the bedroom armoire.

TOP. As you can see in the photo at left, the optional top has more of a traditional, built-up look. This is done by adding two layers of molding instead of just one, as in Fig. 1.

The first layer of molding is mitered to overhang the case 3/4" on the front and sides, as in Fig. 1a. (The sides are squared off flush with the back.) Then I routed a 1/2" cove profile on each piece.

The procedure for the upper layer of molding is the same — the details are just slightly different (Fig. 1a). For starters, the blanks are wider and overhang the first layer only 1/4". And instead of a cove, the top layer gets a 1/4" roundover.

If you are planning on finishing the top and base darker than the case, as shown here, you'll want to wait to attach the top pieces until the finishing process is done. But since you'll want to glue (as well as screw) the pieces in place, just apply finish to the exposed areas.

When it was time to attach the pieces, I simply glued and screwed them in place one at a time (Fig. 1a).

BASE. Unlike the top, the procedure for the optional base is quite a bit different than the original. Instead of legs and rails, there are front and side aprons that wrap around a plywood panel, as in Fig. 2.

You'll want to start with the aprons. They're mitered to length so the base stands proud of the case 3/8" on the front and sides. Then a rabbet is cut on each inside edge to hold a 3/4" plywood panel, and a 1/4" roundover is routed on each outside edge, leaving a 1/16" square shoulder (Fig. 2a). The last thing to do is lay out and cut the curves (Fig. 2b).

Next, the plywood panel can be cut to fit into the rabbets. Then a back piece is cut to fit under the panel and between the sides.

When gluing up the base, I decided to add 3/4"-square blocks to strengthen the corners. And like the top, I applied the finish before screwing the base to the case.

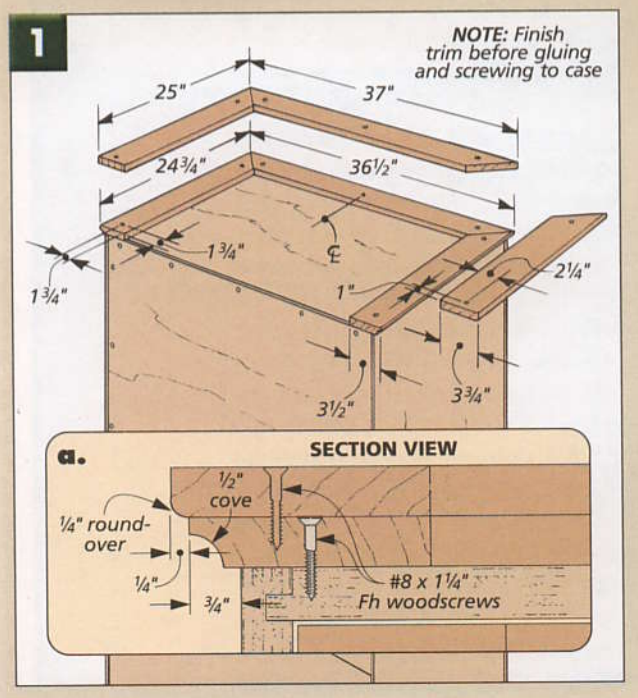

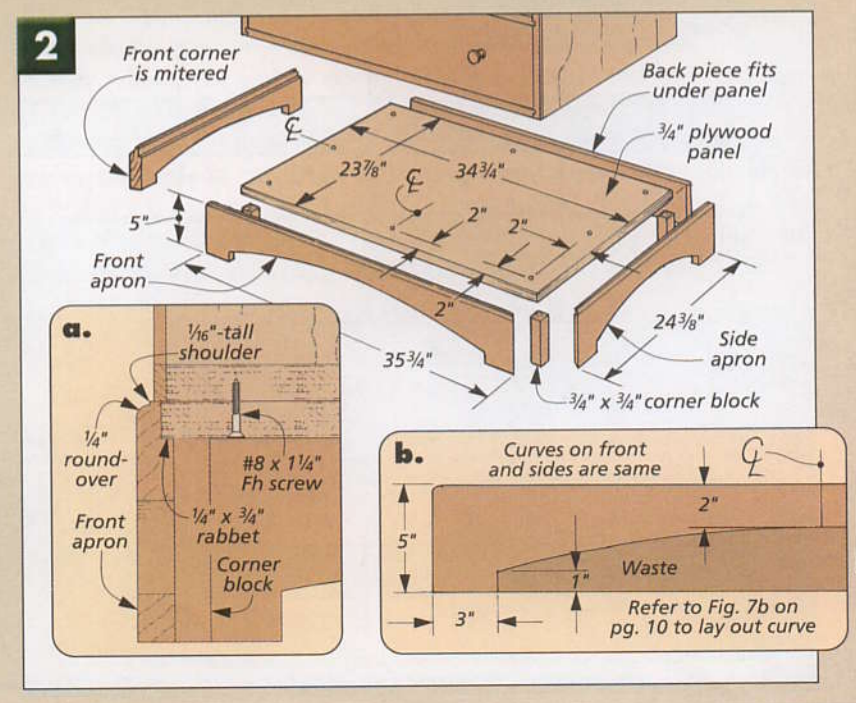

WATER-BASED ANILINE DYES

Get the color you want — without covering up the grain.

To set off the top, base, and pulls of the armoire, I wanted them darker than the case. But I didn't want to use an off-the-shelf stain. They tend to cover up the grain of the wood — especially when you're after a fairly dark color.

Instead, this was the perfect chance to use water-based aniline dyes. These make it easy to darken the wood without covering the grain at all. And the technique is almost as straightforward as an off-the-shelf stain.

PIGMENT STAINS VS. DYES. So how is a dye different than an off-the-shelf stain? It's mostly a matter of size. The stain has pigments that are fairly large and sit on top of the wood (and in the pores). With a thick coat, a pigment acts a lot like paint, hiding much of the wood grain.

Dyes are so much smaller they'll actually change the color of the wood fibers. So you can really darken the wood *without* hiding the grain. It's even possible to "ebonize" wood (dye it black) and still see the grain.

POWDER. Aniline dyes usually come in powder form, so you have a lot more control than you do with an off-the-shelf stain. For one thing, you can mix up just what you need. Just dissolve the dye in a glass or plastic container of water. (It dissolves best in warm, distilled water, but I've used cold, tap water too.)

You also have a lot of control over the color. By mixing different concentrations of powder to water, you can decide how intense you want the color. Or you can mix several different colors to come up with your own custom color.

Note: For this project, I started with 6 oz. of water and added 1 tsp. of Moser's *Natural Antique Cherry*, ¼ tsp. of *Cherry Amber Maple*, and ¼ tsp. of *Dark Red Mahogany*. (See page 35 for sources.)

TEST. As with any stain, the first thing you'll want to do is test the dye on some of the project's scrap wood. This way, you'll know you're getting the exact color you want.

However, when the dye dries, you're in for a bit of a surprise. It will look dull, and the color may even look quite a bit different. Don't worry. All you need to do is apply a coat or two of the top coat of finish you plan to use, and the dye will look glossy again. Plus, you'll be certain the top coat is compatible with the dye stain. (More on that later.)

RAISE GRAIN. With the right mix of dye on hand, the first thing to do is prepare the wood. The water the dye is dissolved in will raise the grain of the wood, and you want to minimize this as much as possible before you stain.

This isn't all that hard. Just brush some water onto the wood. When the wood is dry, you'll be able to feel the grain sticking up like tiny whiskers. Then all you need to do is sand *very lightly* with 220-grit sandpaper.

APPLY DYE. Now that the wood is ready, you can brush on the dye. (You can use either an inexpensive bristle or foam brush. Either way, you *won't* want to reuse the brush — the dye could contaminate a clear finish.)

With a dye, the goal is to keep the entire surface *wet* until it's completely covered. Then you can blot or wipe away any excess stain with a rag.

The reason to keep the surface wet is to avoid lap marks. But if you do end up with a lap mark (or a drip or run), you can usually fix it. After the wood has dried completely, just apply another coat, letting it soak in before wiping it off. And don't worry. As long as you don't change the concentration (or the color), the wood isn't going to get any darker.

TOP COAT. One final note about the top coat. You can't put a water-based finish *directly* on top of a water-based dye. The dye will redissolve in the finish. (Your test piece will help you avoid this.) Instead, you'll want to use another type of finish, like an oil-based varnish or a lacquer. On the armoire, I did use a water-based polyurethane, but to do this, I applied a "sealer" coat of an oil-based finish first. (And I tested this to make sure the finishes were compatible.) W

SHOP NOTES

Installing a Ball Catch

Because most pieces of hardware don't come with mounting instructions, you're on your own to figure out the best way to get them installed. The ball catch on the display case on page 20 is a perfect example. And to get it installed accurately, I had to come up with a few creative solutions.

When installing a ball catch, I like to start with the catch, and then position the strike plate based on the catch's position.

BALL CATCH. For the catch on the display case, the first trick was making an accurate layout on the walnut — or rather, making a *visible* layout mark. To do this, I applied a strip of masking tape to the edge and laid out the centered hole for the catch on the tape, as shown in Fig. 1.

With the hole laid out, first you'll need to drill a shallow 5/16"-dia. counterbore for the lip around the edge of the catch, as shown in Fig. 1a. Then drill a 1/4"-dia. hole for the body of the catch. The hole should be slightly deeper than the body (1/16" or so), but be careful. You don't want to drill through the post at this point.

When the holes have been drilled, the tape can be removed and the catch installed. If the fit is snug, you can just press the catch in place. Otherwise, you'll want to use a little epoxy to hold it secure.

STRIKE PLATE. Now that the ball catch is in place, you need to install the strike plate. The plate I used is only about 1/32" thick and is meant to be surface mounted, but I have seen thicker plates that need to be mortised in. (If yours is 1/16" or more, you can mortise it in with the hinge mortising technique at right.)

To position the strike, you could simply "eyeball" it, but again, masking tape makes things easier to see. As you can see in Figs. 2 and 2a, all you have to do is put a piece on the edge of the door and then close the door. The ball on the catch will leave a little indentation in the tape, so you will know exactly where the ball will end up.

Now you can center the plate over the indentation, as shown in Fig. 3. (The tab of the plate should point towards the *inside* of the case.) I used a scratch awl to mark the screw holes *and* the position of the ball (Fig. 3).

The strike plate had fairly deep "dimples" on the back, so I used a hand countersink so the plate would sit flush, as in Fig. 4. And the center countersink provides a little more clearance for the ball. W

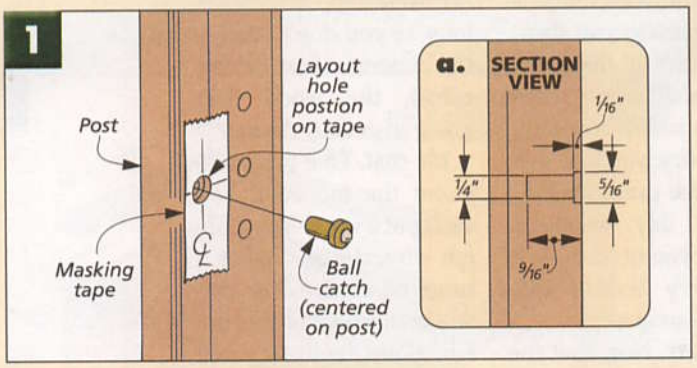

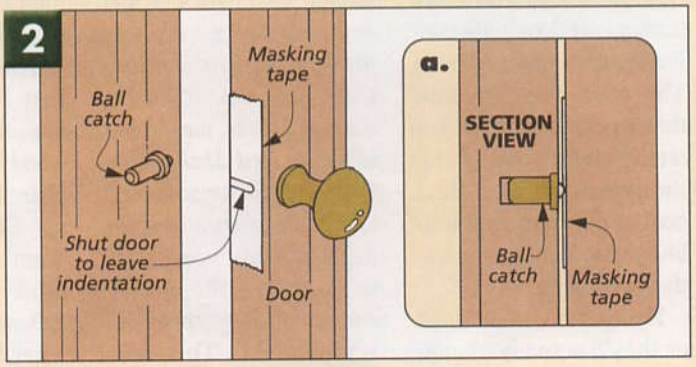

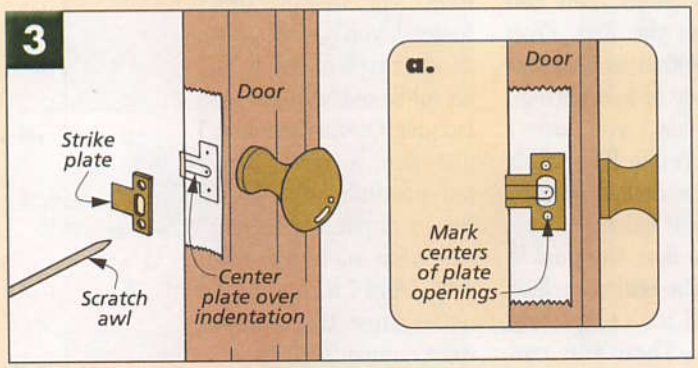

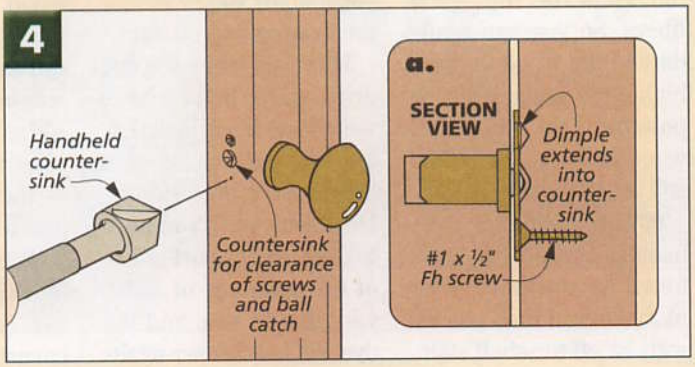

Hinge Mortises in Three Steps

Hinge mortises can be a bit tricky — especially with small pieces, like those on the display case. Here's the quick, three-step method I use when cutting mortises.

LAYOUT. The first thing to do is lay out the position of the hinge, and I use the actual hinge to do this, as in Fig. 1. Simply set the hinge in place and score around it with a utility knife. The knife cuts are easy to see and also help prevent chipout.

ROUT MORTISE. The next step is to rough out the mortise with a straight bit and a hand-held router. The trick here is setting the bit for the depth of the mortise. It's the hinge barrel that determines this, so I measure its thickness and then subtract 1/16" (the gap around the door), as in Fig. 2a. What's left over has to be divided between the two mortises.

With the bit set, you can secure the piece and rout the mortise, as in Fig. 2. You don't want to remove all the waste here. Instead, leave a little on each edge.

The last step is to clean out the mortise with a chisel (Fig. 3). A downward cut deepens the layout line. Then the waste can be pared away. W

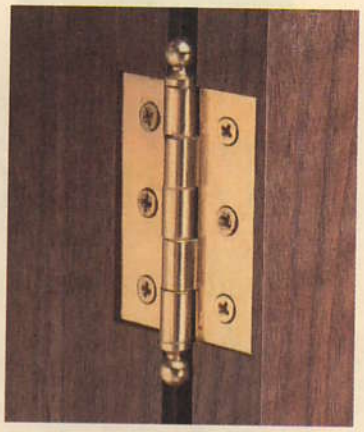

▲ *For the display case on page 20, both the post and door are mortised for the hinges.*

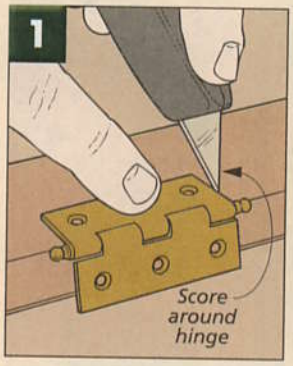

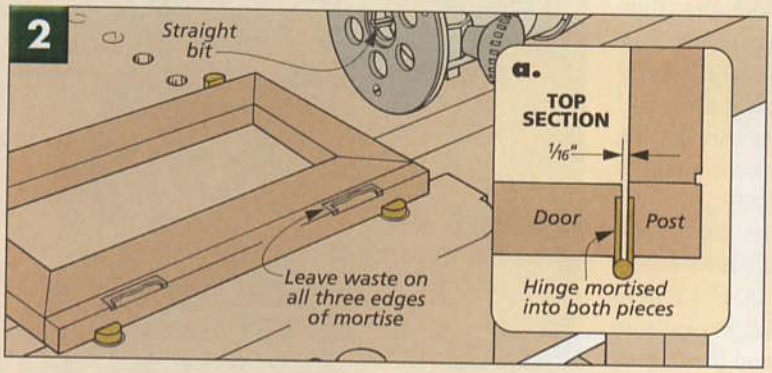

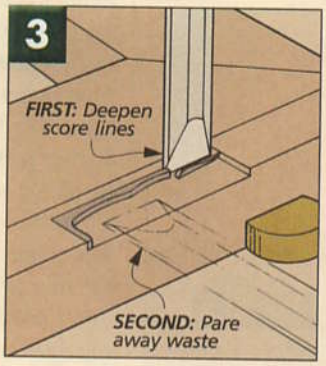

Edge Trimming a Frame

All you need to make the trim used on the picture frame on page 30 is a router table and a table saw. But trying to rout a profile and cut a rabbet on pieces this small can be a little scary.

OVERSIZED BLANK. The solution is to start with an oversized blank. This way, you can safely rout the profile on the blank and then cut the trim to size.

To make the trim, start with a 3/8"-thick blank that is at least 2" wide. The first step is to rout a roundover on all four edges of the blank to create the profile, as you see in Fig. 1. You'll need to use a fence on the router table for this step.

RABBETS. As you can see in the drawing at right, both trim pieces are rabbeted to fit around the frame. To create these rabbets, I cut a couple of grooves in the blank with a dado blade (Fig. 2). Just make sure that you leave some material in between the two grooves to help support the workpiece.

To cut the trim to size, replace the dado blade with a regular saw blade and flip the blank over. Set the rip fence to cut the inside trim first, just as you see in Fig. 3. You'll definitely want to use a push block to prevent the workpiece from getting pinched in between the fence and the saw blade.

To cut the outer trim free from the blank, just flip the blank end for end and reposition the rip fence (Fig. 4). W

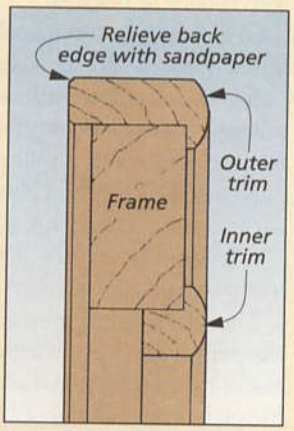

▲ *Both the outside and inside edges of the frame (see page 30) are wrapped with trim.*

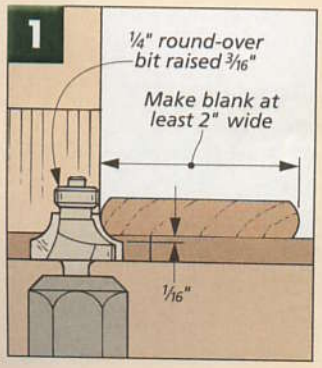

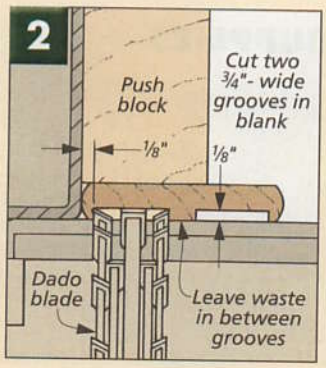

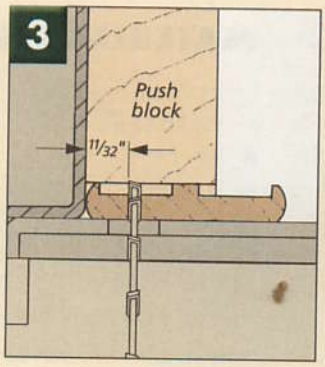

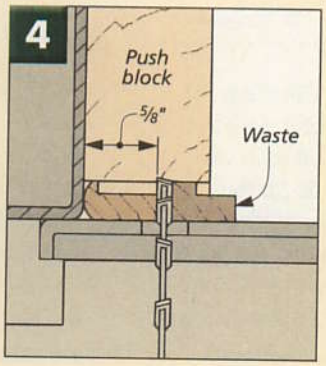

TABLETOP DISPLAY CASE

Built with walnut, beveled glass, and brass hardware, this case certainly looks traditional. But you've probably never built miters quite like these.

When designing this project, I knew there was going to be more glass than wood, espcially on the four frames that form the body (and door) of the case. So I wanted to make sure that the corner joints were going to be plenty strong.

On the other hand, I felt that miters would look best for this project. But miters don't provide the best gluing surface, and the frames are too narrow to reinforce with splines or biscuits.

So instead of a traditional miter joint, I decided to build the frames with a mitered half lap. From the front, it looks like a miter, but it has the face grain glue surface of a half-lap joint, so you know the frames are going to be plenty strong.

There's another design element here that's a little out of the ordinary. To hold the glass in each frame, I created a rabbet by adding decorative trim to the *outside* face of each frame. This is just as effective as a traditional rabbet, but the molding gives each frame a three-dimensional look that's very appealing, especially with the use of beveled glass.

Woodsmith GO ON-LINE EXTRAS

Besides mitered half laps, this case also has quite a few regular miters. To download an article on regular miter joints, go to: www.woodsmith.com

MATERIALS. To build this display case, I used black walnut and walnut plywood, but this isn't your only choice. The display case would also look great in cherry or mahogany. And the brass hardware that's used here is commonly available. (Sources are listed on page 35.)

MATERIALS & SUPPLIES

A Fr./Bk. Rails (4)	¾ x 1¼ - 14½	
B Fr./Bk. Stiles (4)	¾ x 1¼ - 15¾	
C Side Rails (4)	¾ x 1¼ - 8½	
D Side Stiles (4)	¾ x 1¼ - 15¾	
E Decorative Trim	⅜ x ⅝ - 212 In. in.	
F Fr./Bk. Posts (4)	¾ x ¾ - 15¾	
G Subframe Rails (4)	¾ x 1¾ - 16½	
H Subframe Stiles (4)	¾ x 1¾ - 10½	
I Top/Base Rails (4)	¾ x 1¾ - 18	
J Top/Base Stiles (4)	¾ x 1¾ - 12	
K Top Panel (1)	¾ ply. - 9¼ x 15¼	
L Subframe Panel (1)	¾ ply. - 7¾ x 13¾	
M Feet (8)	½ x 1 - 2	
N Glass Stop	⅜ x ⅜ - 200 In. in.	
• (2) ¼" Glass w/1" Bevel (5⅞" x 13⅛")		
• (2) ¼" Glass w/1" Bevel (11⅞" x 13⅛")		
• (1) ¼" Glass w/Pencil Edge (8¼" x 14¼")		
• (4) ¼" Shelf Supports		
• (1 pr.) 2" x 1 3/16" Brass Ball-Tipped Hinges		
• (1) 1⅛" Brass Knob		
• (1) Brass Ball Catch w/Strike Plate		
• (2) #1 x ½" Fh Brass Screws for Strike		
• (1 pkg.) #18 x ⅝" Wire Brads		

Construction Details

OVERALL DIMENSIONS:
18"W x 12"D x 18¾"H

Walnut plywood panel
TOP STILE
½" cove
Rabbeted subframe fits into case opening
SUBFRAME RAIL
Case frames joined with mitered half laps, see page 32
NOTE: Door and back frame start out identical
Splines align frame and post assemblies
Ball catch
Adjustable shelf
Brass strike plate
1⅛" brass knob
Brad
GLASS STOP
¼" glass with 1" bevel
Decorative trim creates rabbet for glass
Door
Base assembly is nearly identical to top assembly
Foot
2" ball-tipped hinge
Side assembly
Spline
POST

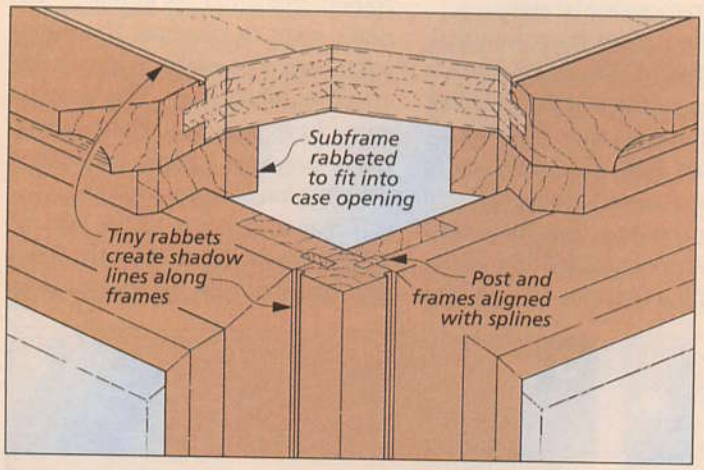

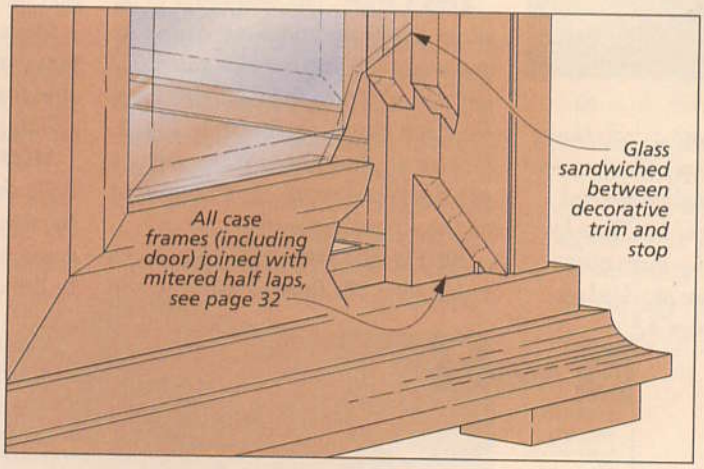

CUTTING DIAGRAM

¾" x 5" - 96" Walnut (Two Boards @ 3.3 Bd. Ft. Each)

A B C D M I J
G G H H I J
F

⅜" x 5¼" - 60" Walnut (Two Boards @ 2.2 Sq. Ft. Each)

E
N

ALSO NEEDED:
One 24" x 24" piece of ¾" plywood

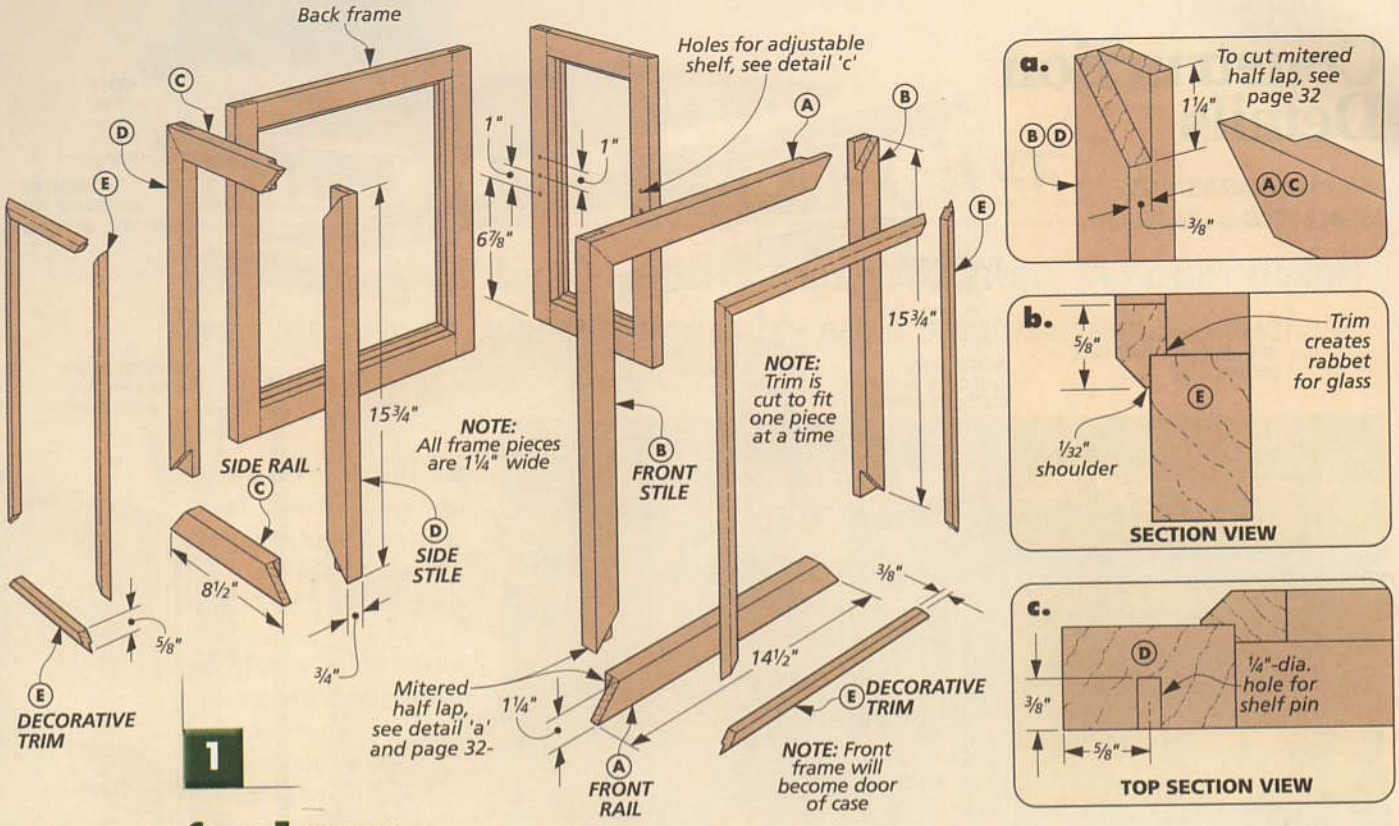

▲ *Ever cut a miter with a dado blade? You will when you make a mitered half lap. Step-by-step instructions are provided on page 32.*

Case Frames

The design of this display case is fairly straightforward. As you can see in Fig. 1, there are two pairs of identical frames. (The front frame will become the door, but for now, it's identical to the back frame.) Also, all four frames have the same decorative molding that wraps around their inside edges.

RAILS & STILES. The first thing to do is cut the *front* and *back rails (A)* and *stiles (B)* and the *side rails (C)* and *stiles (D)* to finished size from ¾"-thick stock, as shown in Fig. 1. Note that all of these frame pieces are the same width (1¼") and that all the stiles are identical.

MITERED HALF LAPS. With the pieces cut to size, it's time to work on the mitered half laps. Just like the name implies, these have the good gluing surface (and strength) of half laps, but the front face of the joint looks like a regular miter. If you've never worked with this type of joint, there's an article on page 32 that will walk you through cutting and gluing up these frames step-by-step.

Once the frames are assembled, you can drill ¼"-dia. holes in each side frame for the support pins that will hold the glass shelf (Fig. 1c).

DECORATIVE TRIM. The last thing to do to these frames for now is to add the *decorative trim (E)*. You'll need some ⅜"-thick stock for this. (Refer to the cutting diagram on page 21.) But don't cut the trim to final size just yet. There's some work to do on these pieces, and it's safer to do it while the blanks are oversized.

Making the trim actually takes several steps. First, I cut a rabbet on the table saw, as shown in Fig. 2. Second, I flipped the piece over and routed a chamfer, as in Fig. 3. You don't want to chamfer the entire edge here. The goal is to leave a tiny shoulder (about 1/32"). This way, you won't have to worry about damaging or breaking a fragile edge. (And I think it looks better too.)

The next step is to rip the trim ⅝" wide from the blank (Fig. 1b). Then the strips can be mitered to wrap

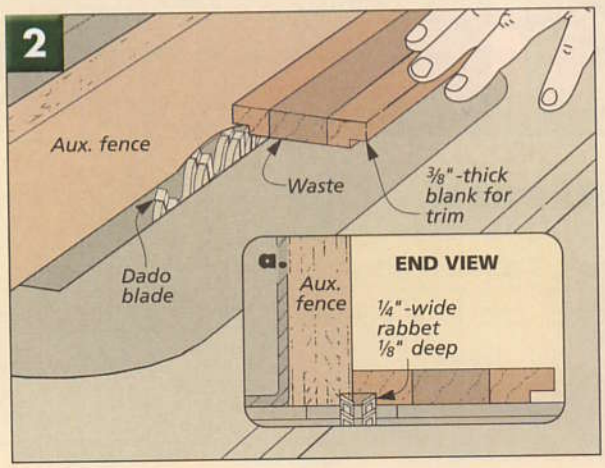

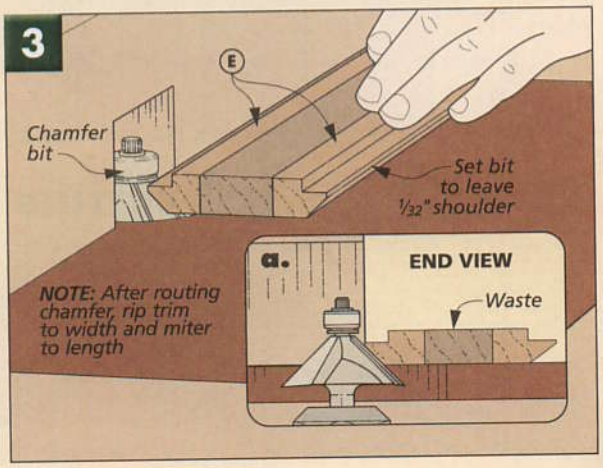

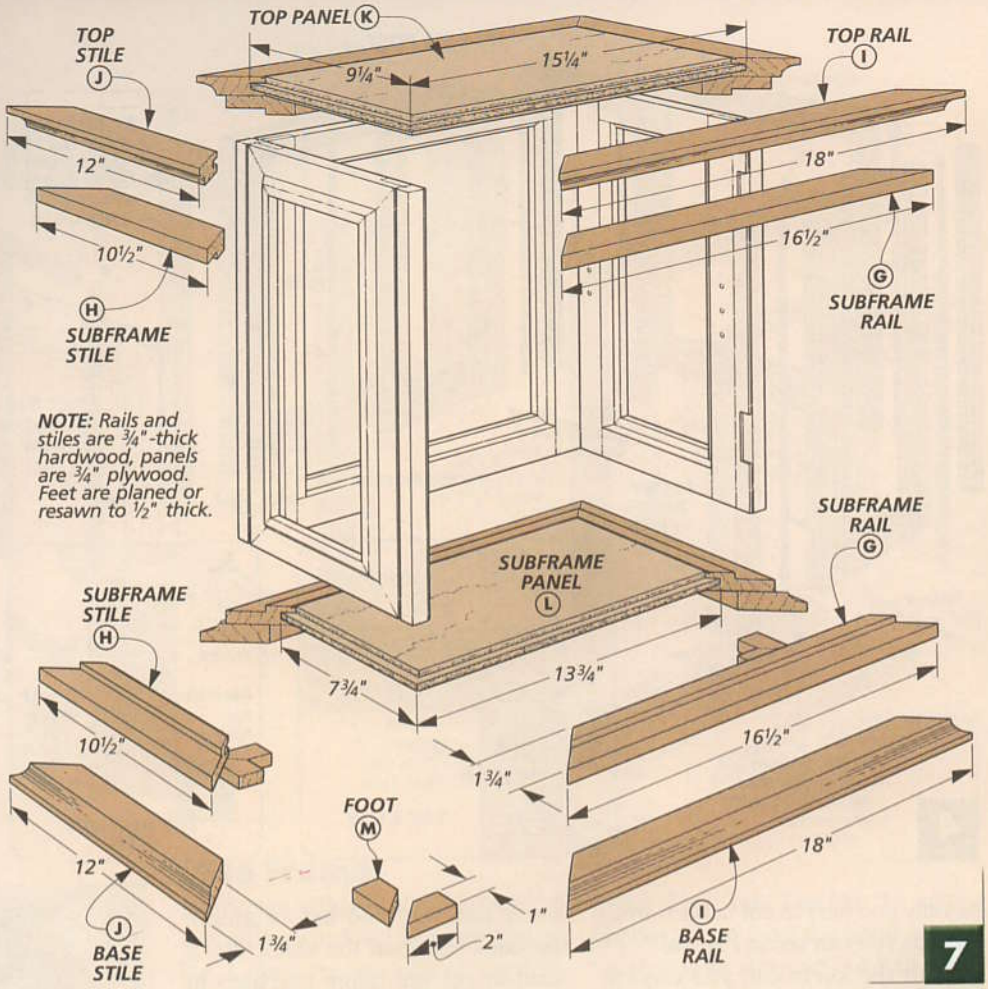

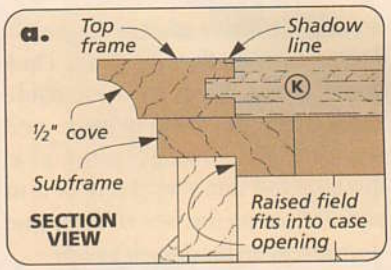

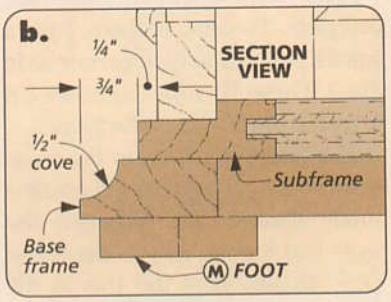

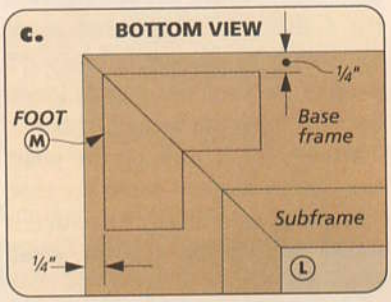

Top, Base & Door

Now that the case has been glued together, it's time to add the top and base. Both are two-layer assemblies with a plywood panel, and both have a "raised field" that fits into the case openings, which makes aligning the assembly much easier.

FRAME PIECES. The first thing to do is plane down some stock to match the thickness of the ¾" plywood you'll be using for the panels. Then the *subframe rails (G)* and *stiles (H)* and the *top* and *base rails (I)* and *stiles (J)* can be cut to final width (1¾") and rough length, as you can see in Fig. 7.

Next, I cut centered grooves on the inside edges of the pieces for the top frame and lower subframe, as in Fig. 8. Then on the *top* face of these pieces, small rabbets are cut that will create shadow lines between each frame and its panel, as shown in Fig. 9. (This is like the rabbets you cut earlier on the posts.)

Now all the top, base, and subframe pieces are ready to be mitered to final length. As you can see in Fig. 7b, the subframe will overhang the case ¼" on each side. And the top and base pieces should end up 1½" longer than the subframe pieces.

PANEL. Now you're ready to cut the ¾" plywood *top panel (K)* and *subframe panel (L)* to fit the grooves in the frame pieces, as in Fig. 7.

The only thing to do to these panels is create a centered tongue to fit into the grooves in the frames (Figs. 7a and 7b). Then to keep the lighter plies from attracting attention, I applied a dark, "walnut" gel stain, as in the margin photo at left.

ASSEMBLY. At this point, all four frames are ready to be assembled. Just remember to include the plywood panels in the lower subframe and top frame assemblies.

▲ *To prevent the plies of the panels from showing, I taped off the face and tongue and then carefully stained the edge with a dark gel stain.*

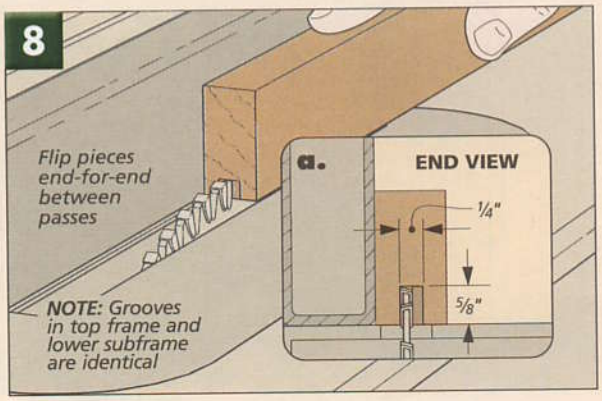

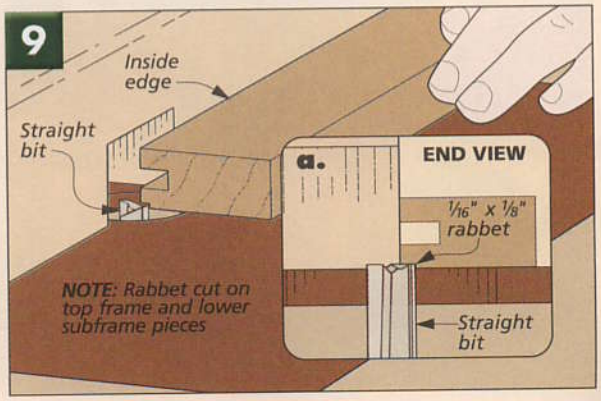

SHAPE FRAMES. After the glue on the frames is dry, you'll need to rout a ½" cove around the top and base, as in Fig. 10. (Use a backer to prevent any chipout.) Then on each subframe, a wide rabbet needs to be routed around the inside face, as shown in Fig. 11. The goal here is to create a raised field that fits into the case opening (Figs. 7a and 7b).

JOINING THE FRAMES. Now you're ready to glue the frames into pairs, and it's easy to center them — just line up the miter joints. Shop Tip: To keep the frames from shifting when gluing them together, you can add some brads and snip the heads off. By pressing the frames together, the brads will hold them in place.

ADD FEET. Before gluing the top and base to the case, I added *feet (M)* to the base, as in Fig. 7. To make these safely, you can plane or resaw an oversized blank to ½" thick. Then after ripping the blank 1"-wide, you can miter the ends, cut the pieces to length (2"), and glue them to the base, as in Fig. 7c. (Again, hold them by hand until the glue sets.)

ADD TOP & BASE. At this point, the top and base assemblies can be glued to the case. There's no trick here. Just don't overdo the glue. You don't want excess to clean up.

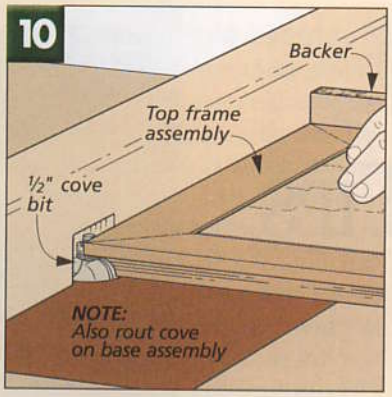

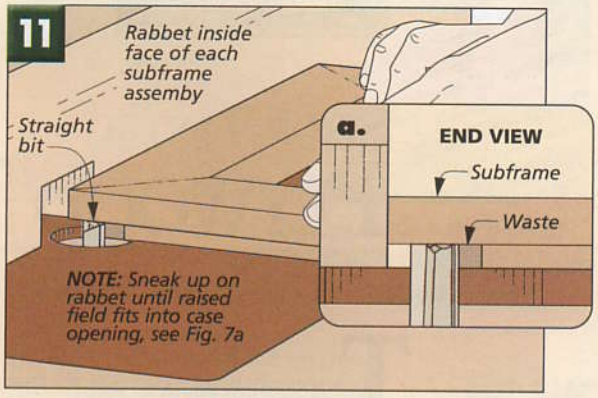

FIT DOOR. All that's left now is to add the door and the glass, including the shelf (Fig. 12). If you've not ordered the glass yet, it should be about ⅛" smaller than the openings.

The door frame is already built, so all that's left to do is trim it to size and mount it on the hinges. But before you do any trimming, it's a good idea to set it in place to check the fit. The goal is to trim enough off of each edge to create 1/16" gaps, as in Fig. 12a. You can do this either with a hand plane or by making light passes at the table saw.

MOUNT DOOR. To mount the door, you'll need to rout another pair of hinge mortises, and for this, you can refer to page 19. Then the brass knob and the ball catch (and strike plate) can be added. Like the hinges, installing the catch requires several steps (though there aren't any mortises to cut), and page 18 has all the information you will need for this.

FINISH, GLASS, & SHELF. All that's left is to add the glass panels and the glass shelf. I cut some ⅜" x ⅜" *glass stop (N)*, as in Fig. 12. But before installing the glass, you'll want to apply the finish. I didn't stain the case — I only applied a top coat. And just about any brush-on or wipe-on finish will work fine. (Try to remove as much hardware as you can before doing this.)

When it's time to add the beveled glass, I'd recommend you drill pilot holes in the stop first. It'll make it easier to drive the brads in, and you won't have to worry about splitting the thin strips.

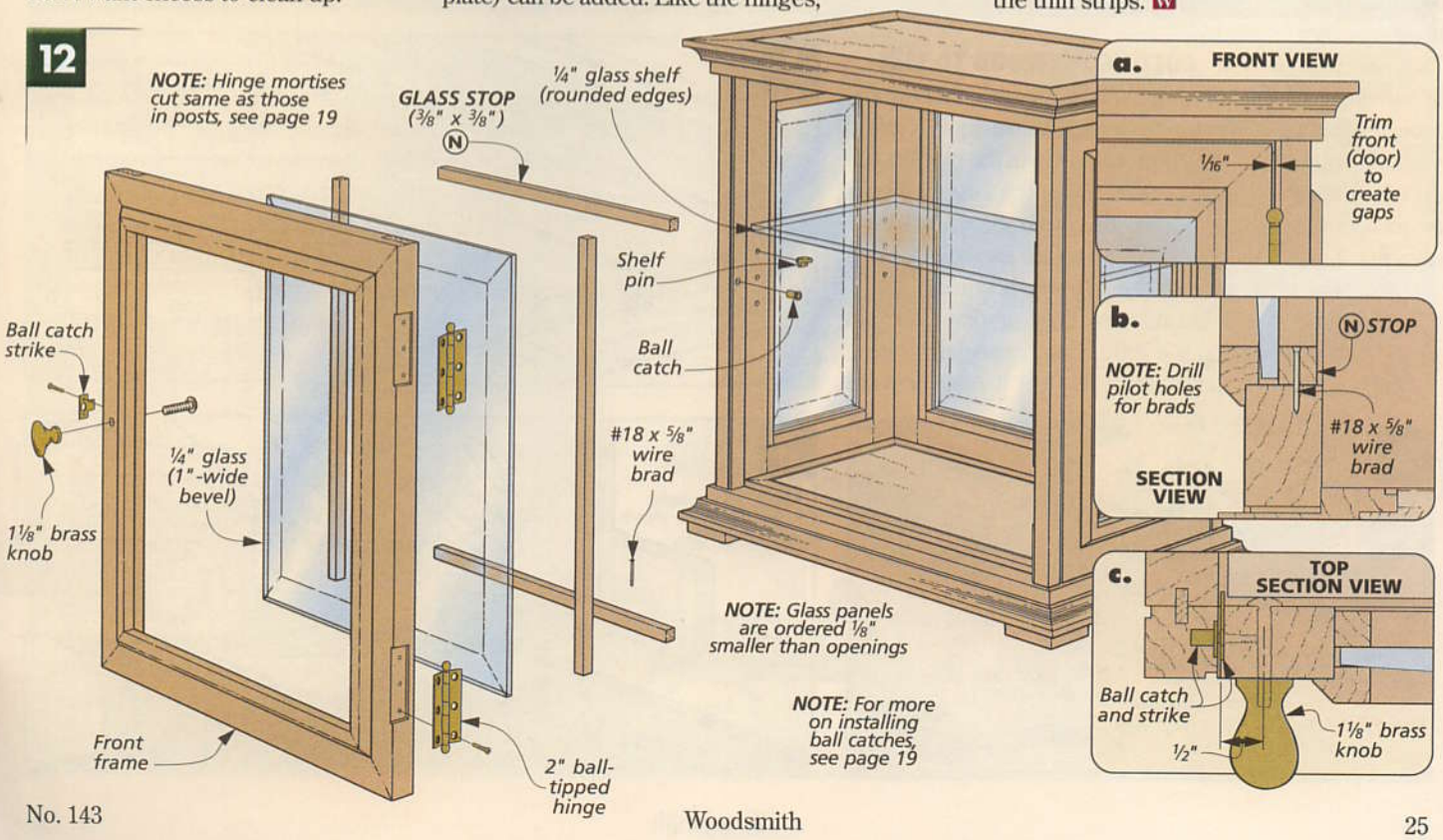

SHOP-TESTED PLYWOOD TIPS

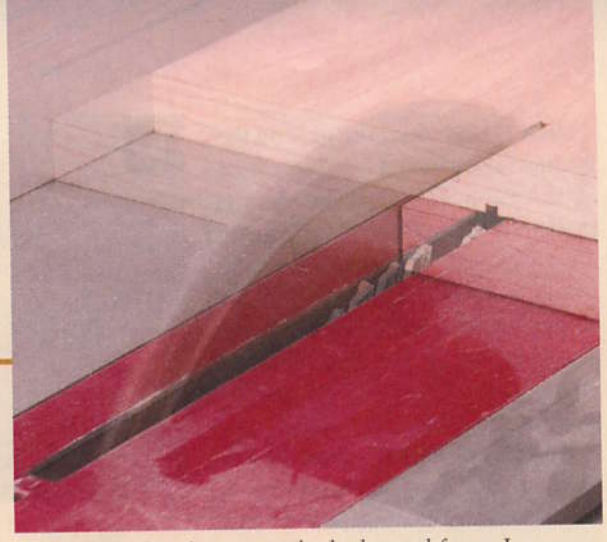

▲ *To get a chip-free cut on both plywood faces, I score the bottom face with the saw blade raised a 1/16" or so. Then I raise the blade to full height and make the cut.*

The beauty of plywood is more than just skin deep — at least for a woodworker. Below the thin face veneers there are layers of alternating plies so even a large panel will keep stable and relatively flat. This can really simplify things when you're building a large project like the bedroom armoire on page 6.

But even if plywood can save you time and simplify the construction, it does have its challenges. Large panels can be difficult to cut accurately, and the thin face veneers have a tendency to chip out. Plus, the plies on the exposed edges need to be covered. However, there are always solutions to these challenges, and we decided to pull together some of our favorites.

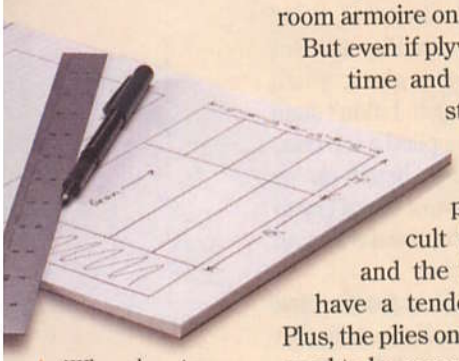

▲ *When drawing a cutting diagram, I include the dimensions and make sure they "add up." Also, be sure to allow enough waste so you can clean up the edges (even the factory edge, as in Fig. 1).*

CUTTING PLYWOOD TO SIZE

Even before I've wrestled a sheet of plywood home, I like to draw a cutting diagram, as shown in the margin. It's best to start with the largest pieces and keep the grain direction of the pieces in mind — especially with pieces that are nearly square.

Making a cutting diagram can take a little time (especially with a large project), but it may prevent you from having to buy an extra half sheet of plywood. Plus, a cutting diagram will often make it pretty clear which rough cuts need to be made first — it's not always the first workpiece you need for the project.

There are a number of different ways to cut plywood, but I like to make sure all the cuts (even the "rough" ones) are as straight, smooth, and chip-free as possible.

TABLE SAW. On the table saw, you want to make any cuts with the good face of the plywood *up*. That's because the blade cuts on the downstroke, so the bottom face is the one that tends to chip out. And if both faces need to be chipfree, then I make a scoring pass first, as shown in the photo above and in Fig. 1a.

Also, though the factory edge is usually straight enough to run against the fence, it's usually a little worse for wear. So I allow for a bit extra when making the first cut. Then I go back and clean up the factory edge, as in Fig. 1.

CIRCULAR SAW. When working with a circular saw (which cuts on the upstroke), you'll be least likely to get chipout by putting the good face of the plywood *down*. I also like to set a full sheet on a piece of foam insulation (Fig. 2). This way, I can extend my reach by crawling onto the plywood. Plus, the waste piece

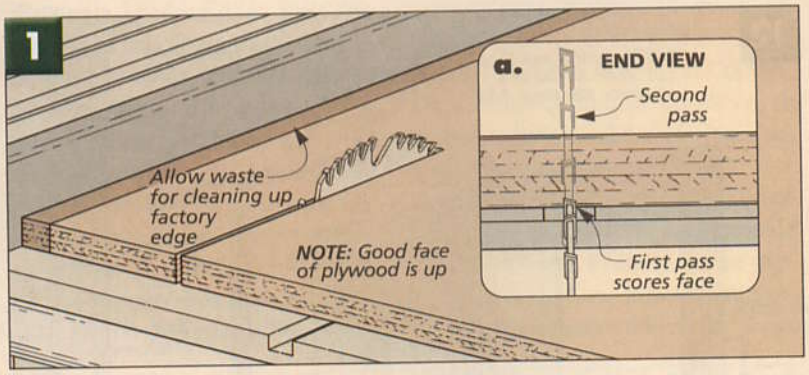

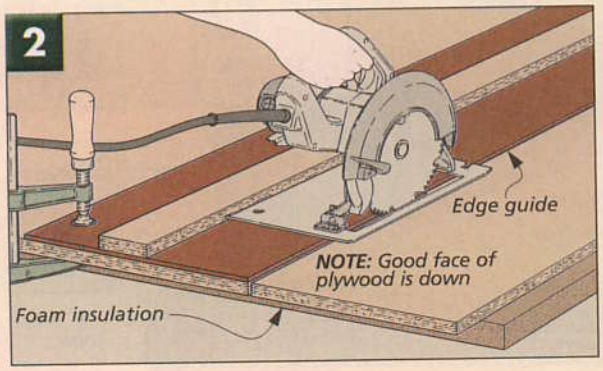

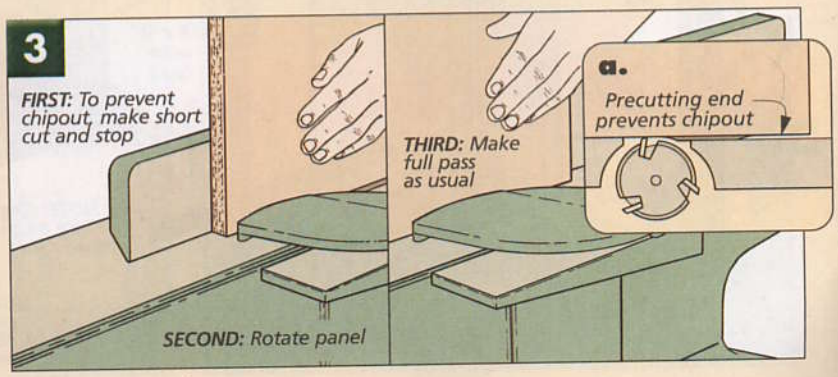

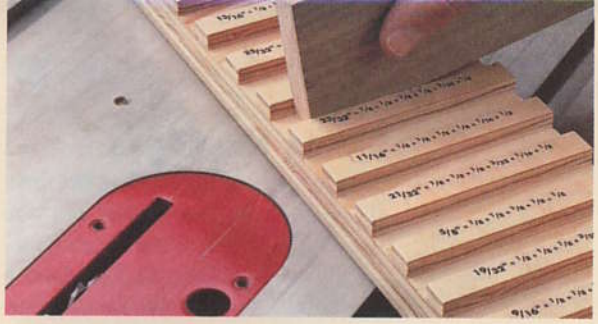

▲ *This gauge has a series of progressively wider dadoes, and each is labeled with the chippers used to cut it. Now setting the dado blade to match the plywood is easy.*

won't drop off and tear away the face veneer at the end of the cut.

I expect my circular saw cuts to be as straight as my table saw cuts. That's because I use the edge guide shown below. Mine has a wide base that matches the base of my router (on one side), which makes it easy to align accurately with a layout line.

JOINTER. There are also times when I like to clean up a plywood edge at the jointer. To avoid chipout at the end of the cut, I use a two-pass method. After feeding the piece into the jointer about 2" to 3", the panel is lifted off and flipped around, as in Fig. 3. Now you can make a full cut, and there won't be any chipout at the end of the piece.

CUSTOM-FITTING DADOES

Depending on the size of the piece, I cut dadoes and grooves either on the table saw or with a router and the edge guide shown in the box below.

ALIGNING DADOES. Usually positioning the dadoes isn't a trick. But if I'm routing them and need them to line up perfectly, I'll clamp two panels front edge to front edge and cut both dadoes in one pass, as I did on the armoire (Fig. 2 on page 8).

What's more of a challenge is sizing the dado to hold plywood. (Plywood is never as thick as its given size, and its thickness can vary from sheet to sheet.)

DADO BLADE GAUGE. If I'm at the table saw, the trick is to match my dado set to the thickness of the plywood. To do this, I've made the handy little set-up gauge shown in the photo above. It's simply two glued-up blocks of ¾" plywood with a series of dadoes cut in it — one for each different width of dado that I can cut with my dado blades and chippers.

TWIN EDGE GUIDES. To rout a dado to accept plywood, I like to use a pair of edge guides, like you see in Fig. 4. (The bit here has to be smaller than the thickness of the plywood.) A piece of the plywood spaces the guides the perfect distance apart (Fig. 4a). To rout the dado, you simply move the router (clockwise) along one edge guide and then back along the other guide, keeping the same point of the router base against the straightedges.

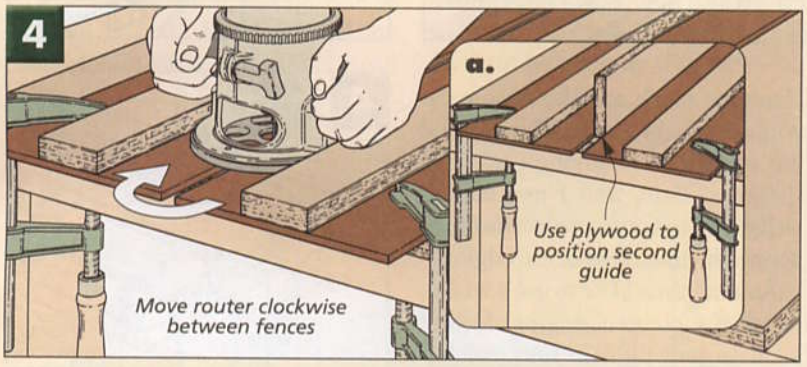

DEEP RABBETS

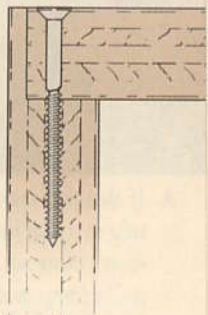

▲ *By cutting an extra deep rabbet, screws will be less likely to split out the sides of the plywood.*

SHOP-MADE EDGE GUIDE

Any straightedge will work to guide a circular saw or a router across a sheet of plywood. The trick is positioning the straightedge so the cut is made exactly where you want it. A nice solution is the edge guide shown at right, and as you can see, it works with both a circular saw *and* a router.

The key to this guide is an extra-wide base that the straightedge is glued and screwed to. To trim the base to size, the circular saw is run along one edge — and the router along the other. Note: For this guide, I used a ⅜"-dia. straight bit. This way, I could rout the ⅜" dadoes in the armoire.

When the base is trimmed, it has a reference edge that will "show" exactly where the cut will be made. So you simply clamp the jig in place so this edge lines up with the layout line.

One more thing. If you need to rout a dado that's wider than the router bit you used to trim the edge, you can't just change bits — that would change the reference edge. Instead, you might want to make a second, identical guide and rout the dado in two passes, as in Fig. 4 above.

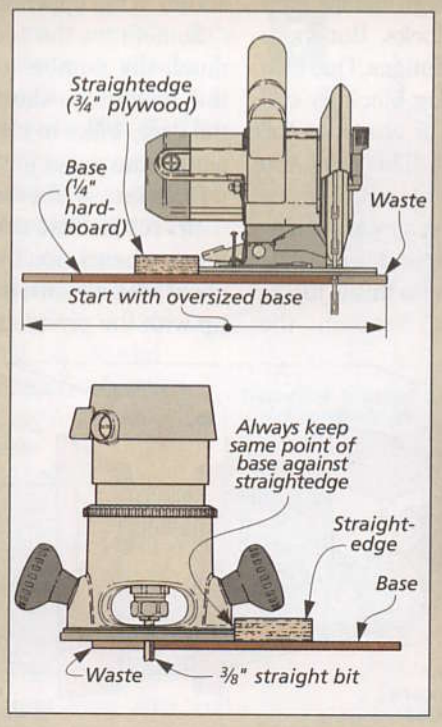

Hiding the Edges

Cutting plywood may be quicker than gluing up a solid wood panel, but you do have to spend some time covering the exposed plies on the edges. I typically like to use 1/4"- or 3/4"-wide strips of hardwood for this, and one of the biggest challenges is clamping these strips to the plywood panels.

One thing that makes this easier is to make the edging slightly thicker than the plywood, as in the margin photos below. This way, you don't have to worry about aligning the edging exactly. Sure, you'll need to trim the edging later, but there are some good tips for that too that I'll share in a minute.

▲ *If there's a spot where a gap just won't close up, a C-clamp and a wedge can be used to apply extra pressure right where you need it.*

CLAMPING SOLUTIONS. Clamping solid wood edging is a numbers game. The more clamps you have, the less chance for gaps. Ideally, I'd put a clamp every four to six inches. But on a large project, like the armoire, that's just not possible.

Usually, I have plenty of clamps if I use a wide clamping block, as in Fig. 1. The wider the block, the farther apart you can space the clamps. That's because the pressure will spread out across the width of the block. Plus, the clamping block protects the face of the edging.

There will be times, though, when you don't have enough clamps even to use the wide blocks. But there are still a couple solutions. One is to modify the clamping block by cutting a slight curve or crown on the edge, as in Fig. 2. This way, the pressure is first centered between the clamps and then spreads out as you tighten the clamps down.

The other way to do this is to use opposing wedges between the clamping block and the edging, as you can see in Fig. 3. The wedges are spaced close enough to force the edge tight, and I use double wedges so the pressure is consistent across the thickness of the edging.

Another time I like to use a wedge is when a piece of edging doesn't want to pull tight in one isolated area. Here I use a C-clamp, a clamping pad (to protect the veneer), and a wedge to spot clamp the edging, as shown in the upper margin photo.

Sometimes the problem isn't so much the number of clamps, but that they're too short. When that's the case, I like to clamp an anchor across the panel for the clamps to pull against, as shown in Fig. 4.

TIPS FOR ALIGNING EDGING. There are times when I don't want to worry about making sure the edging lines up with the plywood. This is especially true for long panels or ones with a slight bow in them. So what I do is either cut a tongue and groove joint or use a spline, as shown in the lower margin photos at left.

And when clamping the edging, if you notice that a slight gap is created, it may be the clamps — not the fit. Most pipe (and bar) clamps apply pressure too high up, which causes the edging to twist, as in Fig. 5a. A simple solution is to use a

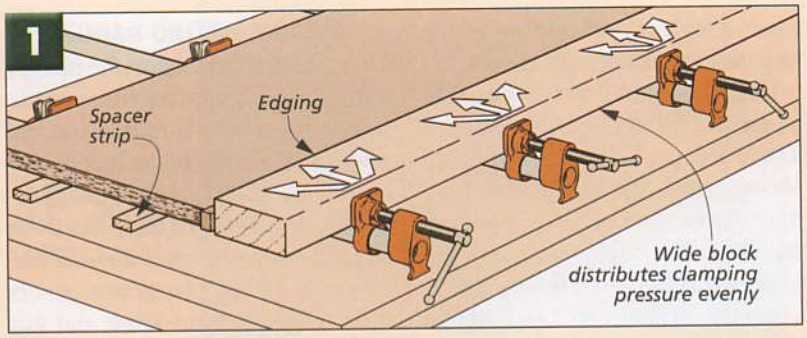

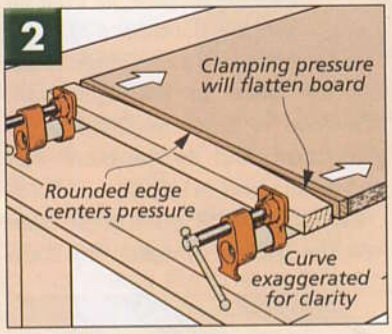

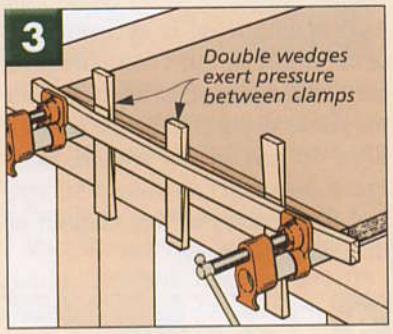

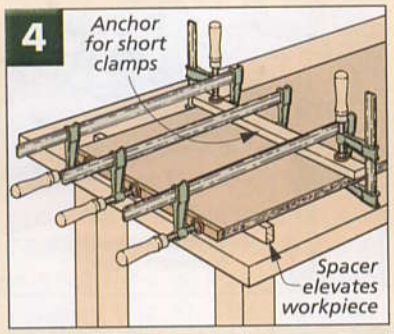

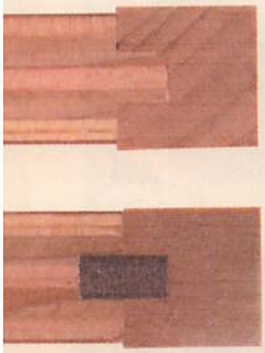

▲ *To help keep the solid wood edging aligned, you can cut a tongue and groove (top) or add a hardboard spline (bottom).*

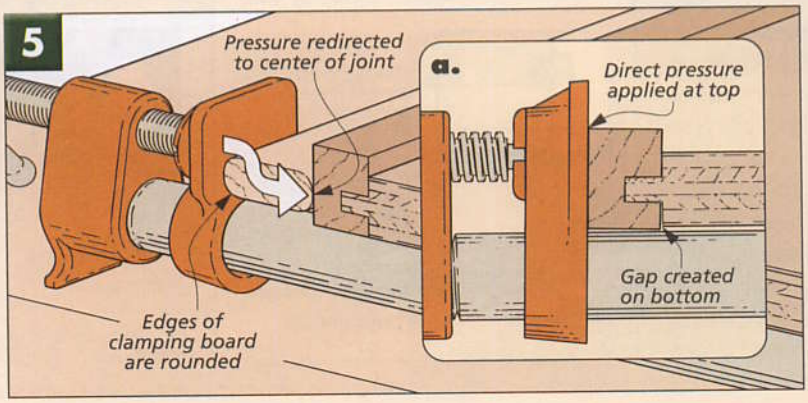

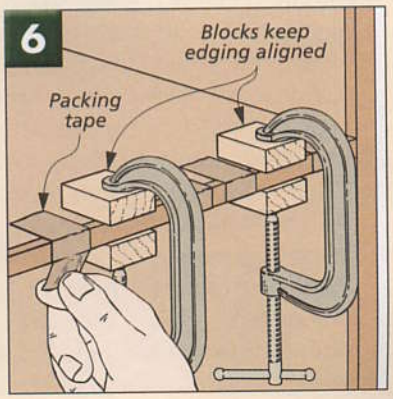

clamping block with rounded edges (Fig. 5). It redirects the pressure so it's centered on the thickness.

One last thing. Sometimes you have to apply the edging *after* the case has been assembled, and it has to match the thickness of the plywood (and line up) exactly. In those situations, I use guide blocks to align the edging, and packing tape to hold it in place, as in Fig. 6.

TRIMMING EDGING. However, most times I like to use oversized edging and trim it flush. If there's not much to trim, I use a block plane or a sanding block, as shown in the photos at right. A piece of masking tape is all you need to prevent sanding or planing through the plywood veneer.

ROUTING EDGING. If there's a lot of edging to trim, I will get out my hand-held router and a flush trim bit. The bit has a bearing that follows the face of the plywood, so the edging ends up perfectly flush. The trick here is balancing the base on the edge of the plywood. But there are a couple ways to do this.

Often, I'll clamp a 2x4 flush with the top edge of the panel, as shown in Fig. 7. But in order for the 2x4 to fit around the edging on the first pass, you'll need to rabbet one edge of the 2x4 (Fig. 7a).

When working with identical panels, like the sides of the armoire, I clamp them together with a couple 2x4s sandwiched between them, as in Fig. 8. The base spans across both panels so there's plenty of support. Just be sure to move the router counterclockwise, and if there are dadoes in the panels, you'll want to fill them temporarily (Fig. 8a).

When planing or sanding edging flush, apply tape to the plywood to create an "early warning system." This way, you can stop before the veneer is damaged.

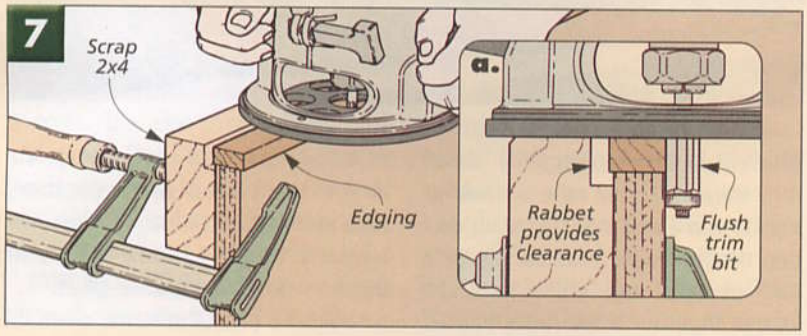

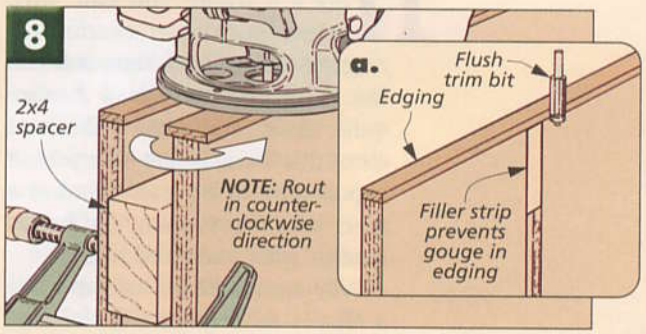

Assembly Tips

Plywood assemblies aren't much different from other assemblies — you want to pull the pieces tight across their entire width. But when clamping a series of shelves between two sides, as on the armoire, you can't get a clamp to the center of most panels.

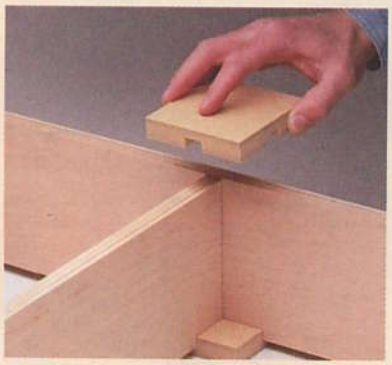

▲ *To hold a large plywood assembly in place while positioning the clamps, I use square blocks with intersecting dadoes in the middle.*

So to pull an assembly tight across wide plywood panels, I often use crowned or curved 2x4 cauls, as shown in Fig. 9. The crown locates the clamping pressure in the center of the panel first and then spreads it out as you tighten down the clamps.

Another problem you'll run into is shelf panels that are slightly bowed. A bowed panel won't fit well and can make it harder to get the assembly square.

A quick solution is to clamp a thick stiffener on edge to force the bowed panel straight, as shown in Figs. 9 and 9a. This straightens the panel during assembly. And once the glue is dry, it should hold the panel straight even after you remove the stiffener. W

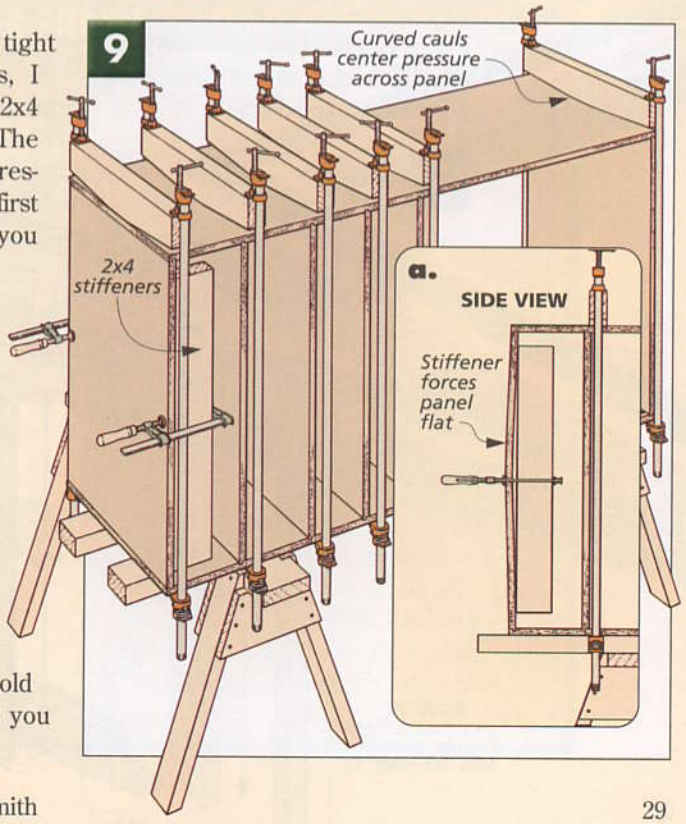

PICTURE FRAME

Want to try your hand at making mitered half laps? This custom picture frame gives you the perfect opportunity.

Here's a frame you can have assembled in an evening. It requires only a few scraps, and you can customize its look or its size quite easily. But what I like best about this frame is that it's a perfect opportunity to try your hand at a miter joint that you may not be too familiar with: a mitered half lap.

Why use a mitered half lap when a simple miter joint will do? The answer is strength. Mitered half laps will ensure that this picture frame will hold together for years, even if it should get dropped or knocked around a bit.

There's a simple elegance about this frame. If you take a look at Fig. 1, you'll see that the main section of the frame is made up of a pair of rails and stiles that are joined together with mitered half laps. Then the inner and outer edges are covered with some simple trim. To provide a little contrast between the main section of the frame and the trim, I used two different types of wood (oak and mahogany). Or if you want even more contrast, take a look at some of the customized frame options shown in the box on the opposite page.

FRAME. To build the frame, start by cutting the *rails (A)* and *stiles (B)* to length. (I sized my frame to hold an 8" x 10" photo.) Then you can cut the mitered half-lap joints on the ends, just as you see in Fig. 1a. (For

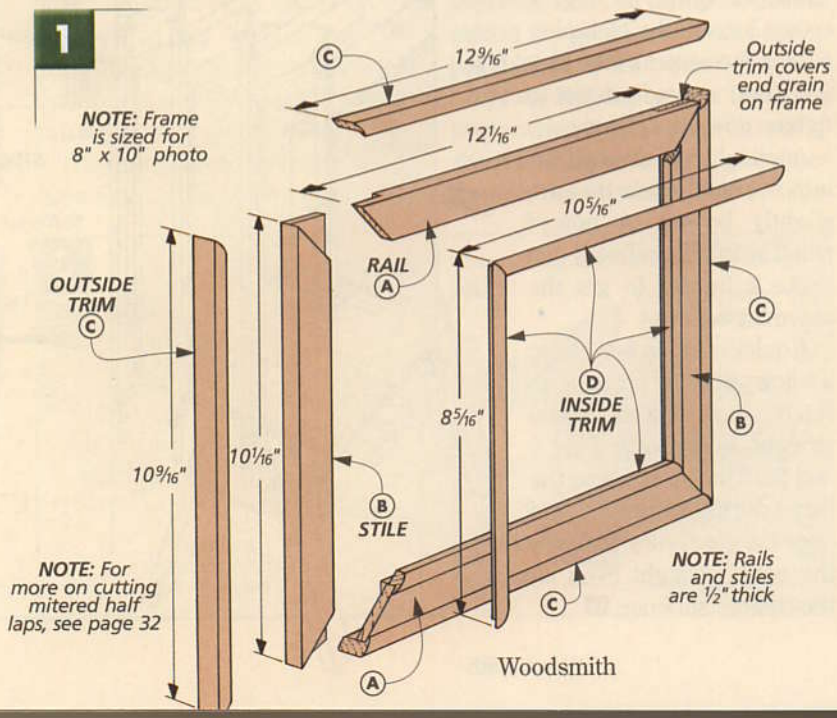

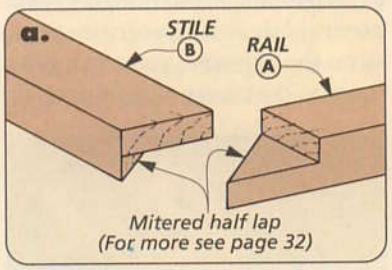

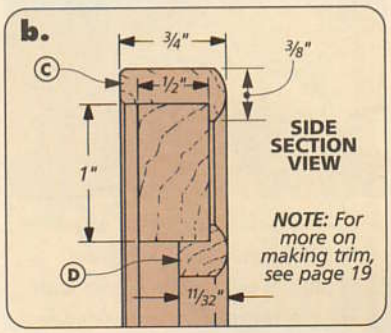

more on making this joint, see the technique article on page 32.)

After you've cut all the mitered half-lap joints, you can glue the rails and stiles up into a frame. The important thing here is to make sure that the frame is glued up square. This will make things a lot easier when it comes to adding the trim later.

TRIM PIECES. I didn't add the trim just because it looked good. These pieces serve a couple of other purposes. The *outside trim (C)* covers the exposed end grain of the mitered half laps (Fig. 2). And the *inside trim (D)* creates a rabbeted opening to hold the glass, picture, and mat backing (Fig. 1b).

A router table and table saw are all you need to make the trim. (For more, see page 19.) The trim pieces can then be mitered and glued in place around the frame (Fig. 3a).

When it comes to mitering the trim pieces, there aren't really any secrets. It's just a matter of trial and error. But I found it easiest to work my way around the frame one piece at a time. This way you can test the fit of each corner.

EASEL BACK. With the frame complete, the last step is to add the photograph (or picture). As you can see in Fig. 3, the photo gets sandwiched between a piece of glass and a posterboard mat. Then I added an "easel back." The easel back is nothing more than a piece of heavy posterboard mat with a hinged, necktie-shaped "leg" that props up the frame like a kickstand on a bicycle. Shop Note: If you buy an 8" x 10" easel back, the leg will be too short and the frame will lean back too far. So instead, I purchased an 11" x 14" easel back and cut the mat down to fit in the opening. (Easel backs are available at art stores, or see page 35 for sources.)

Finally, to hold everything in place, four brass turn buttons are added to the back of the frame (Fig. 3a).

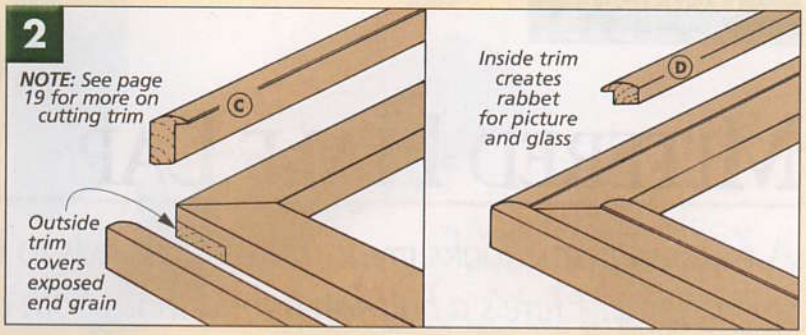

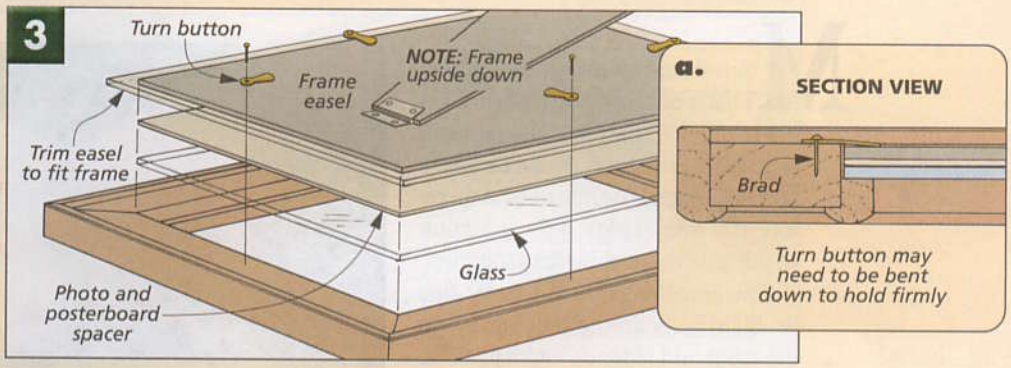

CUSTOMIZING YOUR FRAME

Aside from using different types of wood, you can dramatically change the look of the frame by using veneer or plastic laminate on the main section (see photo at right).

Instead of veneering the individual frame pieces, I started with a single, oversized blank, as shown in the drawing below. (I used hardwood for the blank, but you could also use ½"-thick medium-density fiberboard.) After applying the veneer (or plastic laminate) to one side of the blank, the rails and stiles for the frame can be cut to size. Then the rest of the frame is built just like the one shown in the main article.

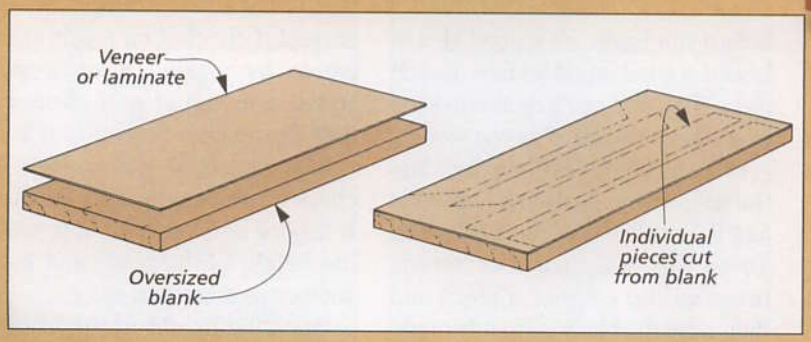

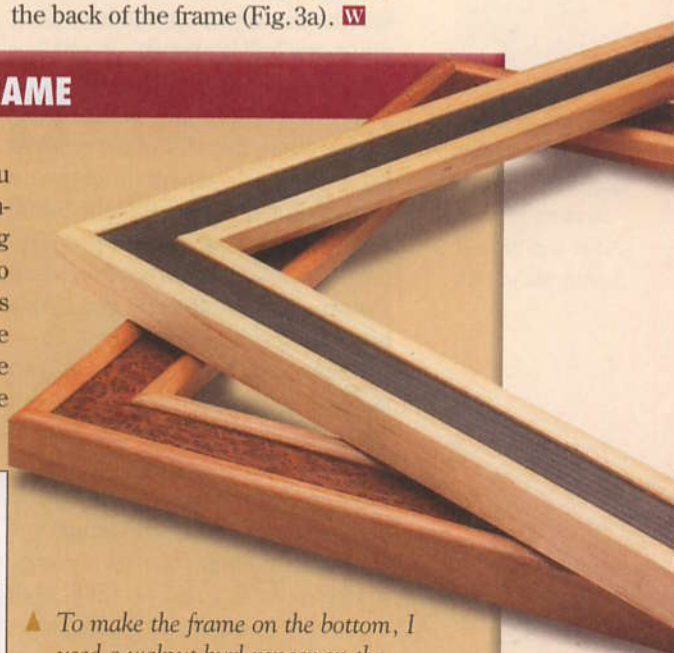

▲ *To make the frame on the bottom, I used a walnut burl veneer on the main section surrounded by cherry trim. The frame on the top is made with plastic laminate and maple trim.*

MITERED HALF LAP

A mitered frame looks great, but often needs to be reinforced to create a strong joint. Here's a half-lap hybrid that's both attractive and strong.

Mitered frames simply look great. That's because the end grain is hidden "inside" the joint. The problem is that the end grain doesn't make a good glue joint. The miters (and therefore the frames) are only as strong as the glue that holds them together.

One solution I like to use for this problem is a mitered half lap. From the front and sides, it looks just like a miter, as you can see in the margin drawing on the opposite page. (A little end grain is visible on the top and bottom.) But with lots of face-grain glue surface, the joint has the strength of a half lap.

A mitered half lap does require a little more work than your typical miter joint. And that's because the rails and stiles are cut *differently* (unlike the typical procedure for a miter or a half-lap joint).

I like to start with the rails. (They're the horizontal pieces of the frame, while the stiles run vertically.) This way, the end grain shows up on the top (and bottom) of the frame (see the drawing on the opposite page). But you could easily switch the procedure so the end grain ends up on each side of the frame.

Regardless of which pieces you start with, the first thing to do is cut them all to finished size. (Be sure to cut several test pieces the same thickness and width as the workpieces.) Fortunately, the lengths of the rails and stiles are as straightforward as it gets — they both match the finished size of the frame.

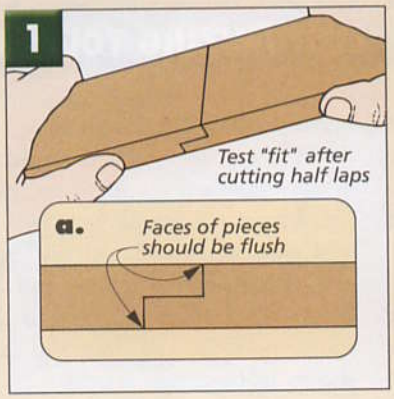

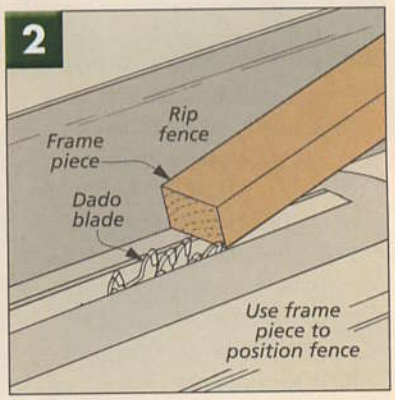

Cutting the rails

To cut the mitered half lap on the rails, there are two steps to complete. First, a standard half lap is cut across its ends. Then the half lap is mitered. But before you begin, it's a good idea to label the good (outside) face of each piece. This way, you'll be able to keep everything organized as you work.

HALF-LAP SETUP. Like any half lap, the dado blade needs to be raised to *half* the thickness of the workpiece. To do this, I lay out a centerline mark on the edge of a piece and then raise the blade up to this mark. Then to make sure the setting is correct, I check it on a pair of test pieces by making a single pass across one end of each piece and then slipping them together (Fig. 1).

After slipping the pieces together, check to see that the faces are flush. If they're not, you'll need to tweak the height of the blade and make another pass on each piece.

Once the height of the blade is set, the next step is to set the rip

fence. Positioning the rip fence accurately ensures the half lap will end up the same width as the frame pieces, as in Fig. 2. Here again, I like to make a test cut to check the setup.

CUT HALF LAPS. Now you're ready to cut the half laps on the rails. For these cuts, the good face should be facing *up*. Note: To prevent chipout along the back of each rail, I added an auxiliary fence to my miter gauge. Cutting the half lap is just a matter of making multiple passes over the dado blade (Figs. 3 and 3a).

Note: Since a dado blade often leaves ridges on the cheek of the half lap, I like to clean up the face by sliding the workpiece back and forth across the blade while slowly pushing the piece forward. You can see this on the rail piece shown in Figs. 4 and 4a.

CUT MITERS. Now that the half laps are cut on the rails, the second step is to miter the ends. The goal here is to remove the waste from the outside corner of the piece to the opposite shoulder of the half lap, as you can see in the photo above.

This is nothing more than a typical 45° miter — but the nice thing is you don't have to remove the dado blade to make the cut. Since the blade is already set to cut just high enough, all you have to do is flip the rail over and sneak up on the miter, as shown in Fig. 5. The side benefit is the dado blade will be ready to go later when it's time to cut the half laps on the stiles. Note: To ensure the rails are cut identically, I like to clamp a stop block to the fence.

After you miter one end, you'll need to rotate the miter gauge to cut the opposite end of each rail (Fig. 6). Note: I had to reposition the auxiliary fence to provide support for the workpiece and readjust the stop block to cut the opposite ends.

The procedure here is the same, and when you're done, it'll be time to work on the stiles. But remember, you don't want to change the dado blade setup. It's already set for making the first cut in the stiles.

◄ *A mitered half lap "hides" the end grain along the sides of the frame. And the joint not only looks good, it's incredibly strong.*

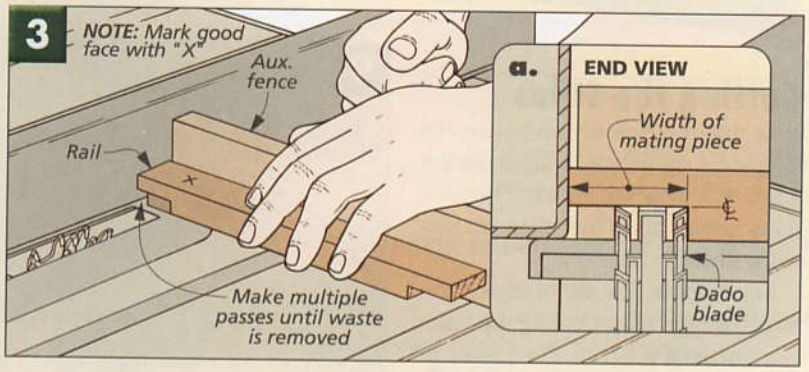

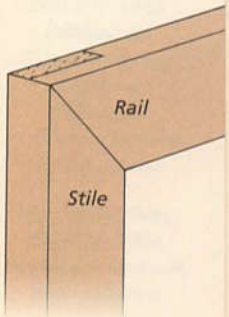

▲ *Starting the mitered half laps on the rails places the end grain at the top and bottom of the frame.*

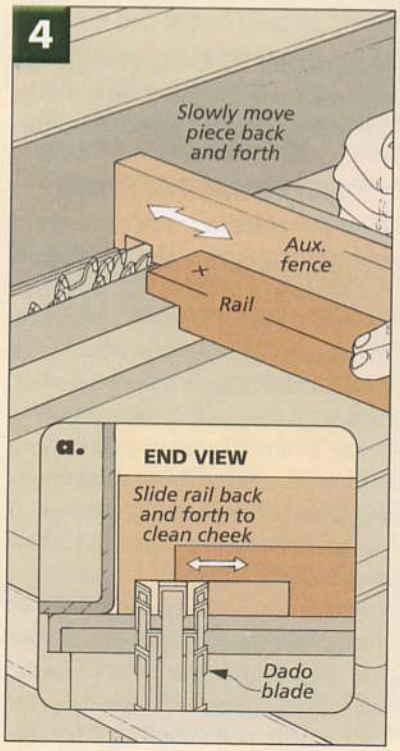

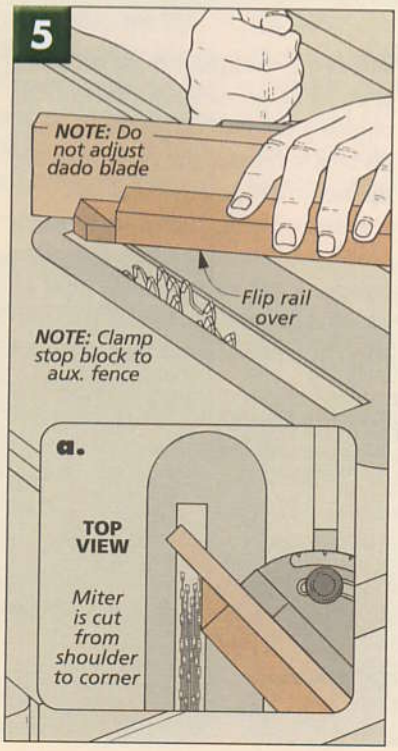

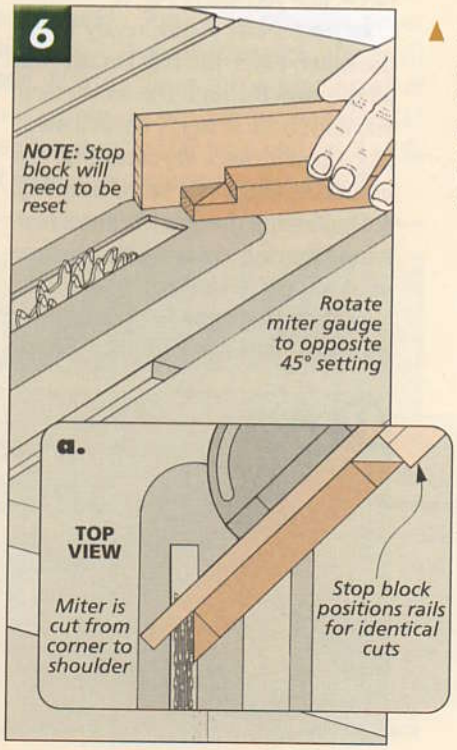

A couple passes across the end of the stile is all it takes to complete a mitered half-lap joint.

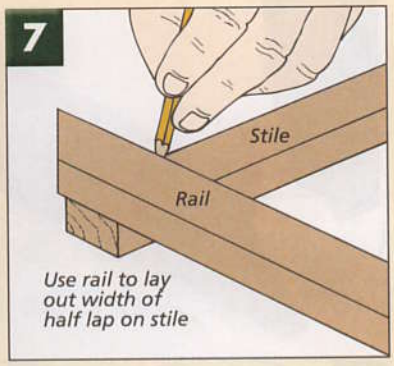

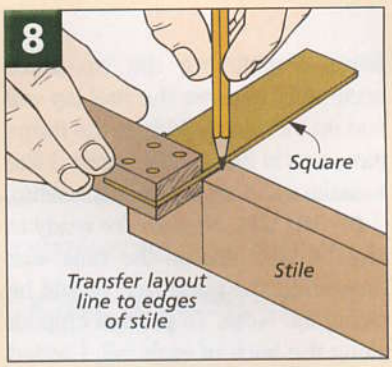

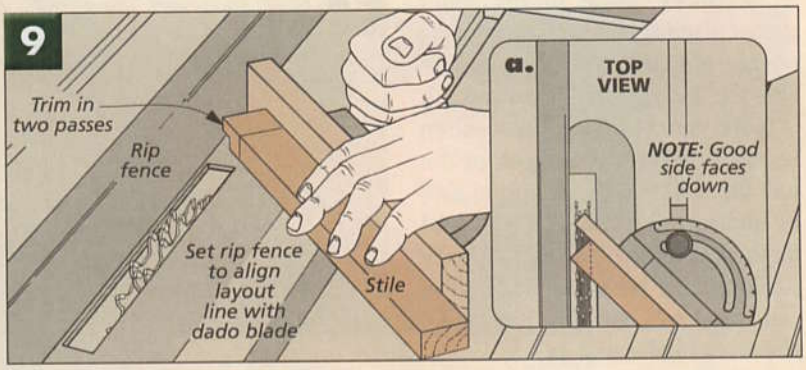

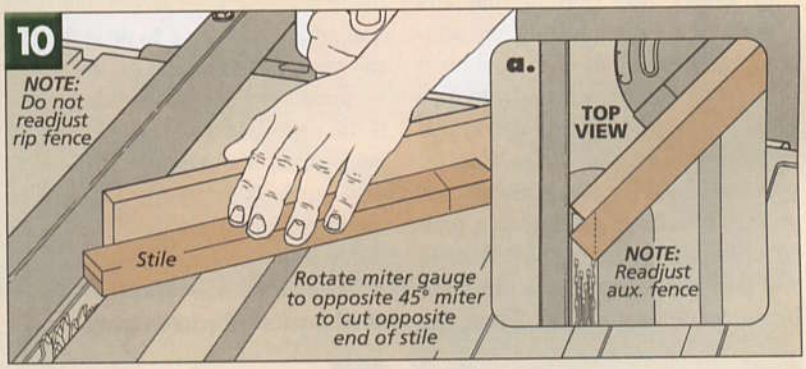

Cutting the Stiles

Now that the rails are complete, it's time to cut the mitered half laps on the stiles, like you see above. The nice thing about this is the stiles are less work than the rails.

For starters, instead of taking two steps like the rails, making the stiles is a one-step process. Plus, most of the set-up work is already complete—the height of the dado blade is set and the miter gauge is at 45°.

LAYOUT. Before making any cuts, take a little time to lay out the location of the miter cut on *one* of the pieces. This way, you can use it to complete the set-up work. To do this, simply lay one of the rails on top of the stile and transfer its width, as illustrated in Fig. 7. Then it's a simple matter to transfer the layout line around the edges of the piece, like you see in Fig. 8.

RIP FENCE. Now you're ready to cut the miter. Since the half lap isn't cut all the way through the workpiece, you don't have to worry about a waste piece kicking back at you. So you can use the rip fence as a "stop," as in Fig. 9. Positioning the fence is just a matter of "shaving" away a little at a time until you reach the layout line.

Although there isn't anything tricky about this procedure, the good side of the workpiece must be facing *down*, as noted in Fig. 9a. And to avoid chipping out the "tip" of the half lap, it's best to remove the waste near the tip before making the final cut.

After cutting one end of each piece, you'll need to rotate the miter gauge to cut the opposite end, as you can see in Figs. 10 and 10a. And the rip fence? Don't worry about readjusting it. Even though the workpiece is oriented differently, the width of the cut is still the same.

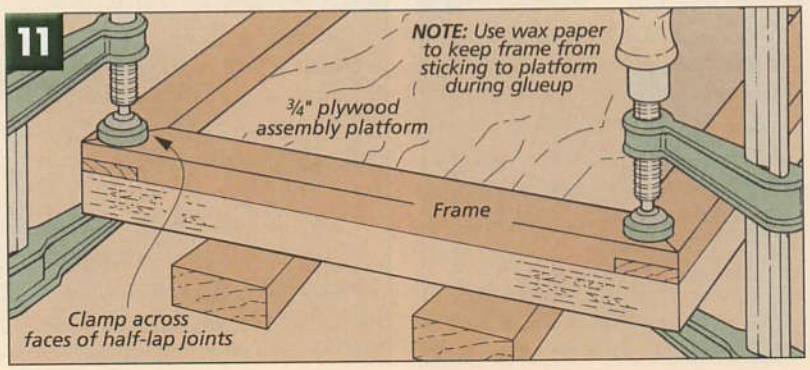

ASSEMBLING THE FRAME

With the stiles cut, you're ready to assemble the frame. The nice thing is the assembly is more like a half-lap joint than a miter joint. As long as the miters are tight, all you need to worry about is clamping the faces together, as you can see in Fig. 11.

To keep things from slipping around, I used a plywood platform cut to match the size of the frame. (I put some spacers underneath to allow room for the clamps.)

A clamp at each corner is really all you should need. But if you're having trouble with the miters staying tight, you can use a clamp across the rails to help pull things together. W

SOURCES

Bedroom Armoire

The bedroom armoire on page 6 requires only a "handful" of hardware, and most of it should be available locally or from the mail order sources at right.

CONCEALED HINGES. The concealed hinges are fairly common, but keep in mind that you may need to order the hinges and the mounting plates separately. (The same plate can be used with different hinges.)

The hinges we chose are made by *Blum*, see photo below. They open 170° and are designed for inset doors. We ordered ours from *Woodworker's Hardware* (B071T6650 for the hinge and B175H719 for the mounting plate), see list.

In addition to the hinge and plate, you'll also need a 35mm drill bit. Because this is the standard size for concealed hinges, you should have no problem finding one, see the list at right.

WOOD PULLS. For the pulls, we purchased 1¼"-dia. cherry pulls (No. K92UC) from *Grand River Wood Products*, see photo. You'll also want to order 1¼"-long screws (No. S14) for mounting the pulls. But other sources at right also carry wood pulls (though the size and profile will be slightly different).

GLIDE TAPE. The only other hardware item (besides assembly screws and shelf pins) is nylon glide tape, see list. It's applied at the bottom and side of each drawer opening, and you'll need 32 lineal feet.

ANILINE DYE. You probably won't find aniline dyes at a local home center, but you should be able to find them at a local woodworking store or through the sources at right.

There are really three different types of aniline dye: those that dissolve in water, oil, and alcohol. Water-based (or water-soluble) dyes are the easiest to work with and the most lightfast (fade resistant).

For the armoire, we used three different *Moser* dyes (refer to the article on page 17). These are only available through *Woodworkers' Supply* (see list), but other brands are available from other sources. And because you can mix different colors (and in different concentrations), you can create an endless variety of colors.

Display Case

The display case on page 20 requires some traditional brass hardware and several panes of glass.

The ball-tipped hinges, shelf pins, and brass knobs are fairly common. We found our knob at a home center (*Liberty* No. 5155). But you may not be able to find ball catches locally. We purchased a ¼" catch from *Lee Valley* (No. 00G11.01), and similar ball catches are readily available, see list.

GLASS. As for the glass, you'll want to order ¼" glass with a 1" bevel for the sides of the case. (For these panels, I ordered them ⅛" smaller than the opening.)

The shelf is ¼"-thick glass with a pencil-style (rounded) edge treatment. All these can be ordered from a local glass shop.

WALNUT PLYWOOD. If you can't find ¾" walnut plywood locally, see the two sources listed at right.

Picture Frame

A local framing shop or a crafts store are both good sources for the easel backs shown on page 31. However, you can also order them through the mail from the source listed at right. We purchased an 11" x 14" back and cut it to fit our frame opening. W

MAIL ORDER SOURCES

Similar project supplies and hardware may be ordered from the following companies:

Dick Blick
800-828-4548
dickblick.com
Easel backs

Grand River Wood
800-475-4001
grandriverwood.com
Cherry pulls

Lee Valley
800-871-8158
leevalley.com
Hinges, 35mm bits, Cherry pulls, Glide tape, Display case hardware

Rockler Woodworking
800-279-4441
rockler.com
Hinges, 35mm bits, Glide tape, Aniline dyes, Display case hardware, Walnut plywood

Woodsmith Store
800-835-5084
Display case hardware, Walnut plywood

Woodworker's Hardware
800-383-0130
wwhardware.com
Hinges, 35mm bits, Cherry pulls

Woodworker's Supply
800-645-9292
woodworker.com
Hinges, 35mm bits, Cherry pulls, Glide tape, Aniline dyes, Display case hardware

WOODSMITH PROJECT SUPPLIES

To order back issues or a hardware kit from *Woodsmith Project Supplies*, please use our Toll-Free order line, see below. It's open Monday through Friday, from 8 AM to 5 PM Central Time. Before calling, please have your VISA, MasterCard, Discover, or American Express card ready.

If you would prefer to mail in an order, please call the Toll-Free phone number below for more information concerning shipping charges as well as any applicable sales tax.

1-800-444-7527

Woodsmith *on the web*

- "Online Extras" - Plans, Patterns, & More
- Over 100 Woodworking Tips Online
- Visit Our Readers' Project Photo Gallery
- Project Plans You Can Download
- Catalog of Project Kits, Tools, Jigs, & Plans
- Forums for Woodworking, Tools, & Classifieds
- Links to Other Woodworking Sites
- Order *Woodsmith* & *ShopNotes* Back Issues

www.woodsmith.com

Online Customer Service
Click on Subscriber Services at
www.woodsmith.com

- Access your account status
- Change your mailing or email address
- Pay your bill
- Renew your subscription
- Tell us if you've missed an issue
- Find out if your payment has been received

FINAL DETAILS

▲ **Bedroom Armoire**. *We updated the traditional armoire by adding an open base and contrasting stains. And we've streamlined the construction by using plywood panels and straightforward joinery. Complete plans begin on page 6.*

▲ **Picture Frames**. *Here's a perfect afternoon project and a great way to try your hand at mitered half laps. And you can customize each frame with highly-figured veneer or contrasting woods. Detailed plans start on page 30.*

Display Case. ► *The beveled glass panes and shelf of this elegant display case highlight its one-of-a-kind collectibles from all directions. You'll find step-by-step instructions to guide you through the process starting on page 20.*